This is a digital copy of a book that was preserved for generations on library shelves before it was carefully scanned by Google as part of a project to make the world's books discoverable online.

It has survived long enough for the copyright to expire and the book to enter the public domain. A public domain book is one that was never subject to copyright or whose legal copyright term has expired. Whether a book is in the public domain may vary country to country. Public domain books are our gateways to the past, representing a wealth of history, culture and knowledge that's often difficult to discover.

Marks, notations and other marginalia present in the original volume will appear in this file - a reminder of this book's long journey from the publisher to a library and finally to you.

Usage guidelines

Google is proud to partner with libraries to digitize public domain materials and make them widely accessible. Public domain books belong to the public and we are merely their custodians. Nevertheless, this work is expensive, so in order to keep providing this resource, we have taken steps to prevent abuse by commercial parties, including placing technical restrictions on automated querying.

We also ask that you:

+ *Make non-commercial use of the files* We designed Google Book Search for use by individuals, and we request that you use these files for personal, non-commercial purposes.

+ *Refrain from automated querying* Do not send automated queries of any sort to Google's system: If you are conducting research on machine translation, optical character recognition or other areas where access to a large amount of text is helpful, please contact us. We encourage the use of public domain materials for these purposes and may be able to help.

+ *Maintain attribution* The Google "watermark" you see on each file is essential for informing people about this project and helping them find additional materials through Google Book Search. Please do not remove it.

+ *Keep it legal* Whatever your use, remember that you are responsible for ensuring that what you are doing is legal. Do not assume that just because we believe a book is in the public domain for users in the United States, that the work is also in the public domain for users in other countries. Whether a book is still in copyright varies from country to country, and we can't offer guidance on whether any specific use of any specific book is allowed. Please do not assume that a book's appearance in Google Book Search means it can be used in any manner anywhere in the world. Copyright infringement liability can be quite severe.

About Google Book Search

Google's mission is to organize the world's information and to make it universally accessible and useful. Google Book Search helps readers discover the world's books while helping authors and publishers reach new audiences. You can search through the full text of this book on the web at `http://books.google.com/`

UC-NRLF
B 3 804 698

LIBRARY
UNIVERSITY OF CALIFORNIA
DAVIS

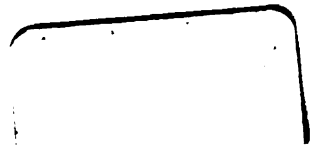

THE

ASTROPHYSICAL JOURNAL

An International Review of Spectroscopy and
Astronomical Physics

Volume 2

1895

Reprinted with the permission of the original publishers

JOHNSON REPRINT CORPORATION
NEW YORK, NEW YORK

FRONTISPIECE

YERKES OBSERVATORY OF THE UNIVERSITY OF CHICAGO

Lake Geneva, Wisconsin

THE

ASTROPHYSICAL JOURNAL

An International Review of Spectroscopy and Astronomical Physics

EDITORS

GEORGE E. HALE
Director of the Yerkes Observatory

JAMES E. KEELER
Director of the Allegheny Observatory

ASSISTANT EDITORS

J. S. AMES
Johns Hopkins University

HENRY CREW
Northwestern University

W. W. CAMPBELL
Lick Observatory

E. B. FROST
Dartmouth College

F. L. O. WADSWORTH, *University of Chicago*

ASSOCIATE EDITORS

M. A. CORNU
École Polytechnique, Paris

C. S. HASTINGS
Yale University

N. C. DUNÉR
Astronomiska Observatorium, Upsala

A. A. MICHELSON
University of Chicago

WILLIAM HUGGINS
Tulse Hill Observatory, London

E. C. PICKERING
Harvard College Observatory

P. TACCHINI
Osservatorio del Collegio Romano, Rome

H. A. ROWLAND
Johns Hopkins University

H. C. VOGEL
Astrophysikalisches Observatorium, Potsdam

C. A. YOUNG
Princeton University

VOLUME II

JUNE—DECEMBER 1895

CHICAGO

The University of Chicago Press

1895

LIBRARY
UNIVERSITY OF CALIFORNIA
DAVIS

First reprinting, 1959, Johnson Reprint Corporation

TABLE OF CONTENTS.

GENERAL.

PAGE.

A CONTRIBUTION TO THE THEORY OF RADIATION. G. Jaumann - 215
A NEW FORM OF STELLAR PHOTOMETER. E. C. Pickering - - 89
A REVIEW OF THE SPECTROSCOPIC OBSERVATIONS OF MARS. W. W. Campbell - - - - - - - - - - - 28
A SPECTROGRAPHIC DETERMINATION OF VELOCITIES IN THE SYSTEM OF SATURN. W. W. Campbell - - - - - - 127
CELESTIAL PHOTOGRAPHS WITH A "MAGIC LANTERN" LENS. E. E. Barnard - - - - - - - - - - - - 351
CLOSE BINARY SYSTEMS AND THEIR RELATION TO SHORT PERIOD VARIATIONS. Alexander W. Roberts - - - - - - 283
CONDITIONS AFFECTING THE FORM OF LINES IN THE SPECTRUM OF SATURN. James E. Keeler - - - - - - - - - 63
NOTE ON THE MAGNESIUM BAND AT λ 5007. H. Crew and O. H. Basquin - - - - - - - - - - - - - 100
NOTE ON THE SPECTRUM OF CARBON. H. Crew and O. H. Basquin 103
ON A PHOTOGRAPHIC SEARCH FOR A SATELLITE TO THE MOON. E. E. Barnard - - - - - - - - - - - - 347
ON THE BROADENING OF SPECTRAL LINES. A. A. Michelson - 251
ON THE DISTRIBUTION IN LATITUDE OF SOLAR PHENOMENA OBSERVED AT THE ROYAL OBSERVATORY OF THE ROMAN COLLEGE IN 1894. P. Tacchini - - - - - - - - 26
ON THE EFFECT OF PRESSURE OF THE SURROUNDING GAS ON THE TEMPERATURE OF THE CRATER OF AN ELECTRIC ARC LIGHT. W. E. Wilson - - - - - - - - - 212
ON THE ELECTROMAGNETIC NATURE OF THE SOLAR RADIATION AND ON A NEW DETERMINATION OF THE TEMPERATURE OF THE SUN. H. Ebert - - - - - - - - - - 55
ON THE EXISTENCE OF A TWILIGHT ARC UPON THE PLANET MARS. Percival Lowell - - - - - - - - - 136
ON THE EXISTENCE OF LAW IN THE SPECTRA OF SOLID BODIES, AND ON A NEW DETERMINATION OF THE TEMPERATURE OF THE SUN. F. Paschen - - - - - - - - - 202
ON THE FORMS OF THE DISKS OF JUPITER'S SATELLITES. S. I. Bailey - - - - - - - - - - - - - 97

ON THE LIMIT OF VISIBILITY OF FINE LINES IN A TELESCOPE. A. A. Michelson - - - - - - - - - - - 60
ON THE OCCURRENCE IN STELLAR SPECTRA OF THE LINES OF CLÈVEITE GAS, AND ON THE CLASSIFICATION OF STARS OF THE FIRST SPECTRAL TYPE. H. C. Vogel - - - - 333
PHOTOGRAPH OF THE NEBULA *N. G. C.* 1499, NEAR THE STAR ξ PERSEI. E. E. Barnard - - - - - - - - - 350
PHOTOGRAPHS OF THE MILKY WAY NEAR 15 MONOCEROTIS AND NEAR ε CYGNI. E. E. Barnard - - - - - - - 58
PHOTOMETRY OF A LUNAR ECLIPSE. F. W. Very - - - - 293
PRELIMINARY TABLE OF SOLAR SPECTRUM WAVE-LENGTHS. VI., p. 45; VII., p. 109; VIII., p. 188; IX., p. 306; X., p. 360. H. A. Rowland - - - - - - - - - - - -
RÉSUMÉ OF SOLAR OBSERVATION MADE IN 1894 AT THE ASTROPHYSICAL OBSERVATORY OF CATANIA. A. Mascari - - - 119
SEVEN NEW VARIABLE STARS. M. Fleming - - - - - 198
SOLAR OBSERVATIONS MADE AT THE ROYAL OBSERVATORY OF THE ROMAN COLLEGE: January-June, 1895. P. Tacchini - - 224
SPECTROSCOPIC OBSERVATIONS OF COLORED STARS. Friedrich Krueger - - - - - - - - - - - - - - 148
STARS HAVING PECULIAR SPECTRA. EIGHT NEW VARIABLE STARS IN CETUS, VELA, CENTAURUS, LUPUS, SCORPIO, AQUILA AND PEGASUS. M. Fleming - - - - - - - - - 354
STARS WHOSE SPECTRA CONTAIN BOTH BRIGHT AND DARK HYDROGEN LINES. W. W. Campbell - - - - - - - - - 177
THE ARC-SPECTRA OF THE ELEMENTS. III. PLATINUM AND OSMIUM. H. A. Rowland and R. R. Tatnall - - - - - - - 184
THE MEASUREMENT OF SOME STANDARD WAVE-LENGTHS IN THE INFRA-RED SPECTRA OF THE ELEMENTS. I., p. 1; II., p. 106. E. P. Lewis - - - - - - - - - - - - -
THE MODERN SPECTROSCOPE. XIII. A NEW MULTIPLE TRANSMISSION PRISM OF GREAT RESOLVING POWER. F. L. O. Wadsworth 264
THE MODERN SPECTROSCOPE. XIV. FIXED-ARM CONCAVE GRATING SPECTROSCOPES. F. L. O. Wadsworth - - - - - 370
THE SPECTRUM OF HELIUM. W. Crookes - - - - - 227

MINOR CONTRIBUTIONS AND NOTES.

ÉTIENNE-LÉOPOLD TROUVELOT. George E. Hale - - - - 166
FRIEDRICH WILHELM GUSTAV SPÖRER. H. C. Vogel - - - 239
HARVARD COLLEGE OBSERVATORY CIRCULARS, No. 1 AND No. 2. E. C. Pickering - - - - - - - - - - - 320

NOTE ON A DIFFERENTIAL METHOD OF DETERMINING THE VELOCITY OF STARS IN THE LINE OF SIGHT. Edwin B. Frost - - 235
NOTE ON EARLIER OBSERVATIONS OF ATMOSPHERIC ABSORPTION BANDS IN THE INFRA-RED SPECTRUM. F. W. Very - - 237
NOTE ON HELIUM IN β LYRÆ. E. B. Frost - - - - - - 383
NOTE ON PASCHEN'S LAWS OF RADIATION. F. W. Very - - - 316
NOTES ON SCHMIDT'S THEORY OF THE SUN (communicated by E. J. Wilczynski). George E. Hale - - - - - - - 69
NOTE ON THE HUGGINS METHOD OF PHOTOGRAPHING THE SOLAR CORONA WITHOUT AN ECLIPSE. George E. Hale - - - 77
NOTE ON THE D_3 LINE IN THE SPECTRUM OF THE CHROMOSPHERE. George E. Hale - - - - - - - - - - - 165
NOTE ON THE DUPLICITY OF THE D_3 LINE. A. Riccò - - - 236
NOTE ON THE SPECTROSCOPIC PROOF OF THE METEORIC CONSTITUTION OF SATURN'S RINGS. James E. Keeler - - - - 163
NOTE ON THE SPECTRUM OF THE AURORA BOREALIS. W. W. Campbell - - - - - - - - - - - - - - 162
NOTE ON THE YERKES OBSERVATORY. George E. Hale - - - 74
OBSERVATIONS OF THE B BAND IN STELLAR SPECTRA. W. W. Campbell - - - - - - - - - - - - - 163
ON THE CAUSE OF THE GRANULATION OF THE SURFACE OF THE SUN. J. Scheiner - - - - - - - - - - - - 77
ON THE PRESENCE OF HELIUM IN CLÈVEITE. George E. Hale - 76
ON THE WAVE-LENGTH OF THE D_3 LINE IN THE SPECTRUM OF THE CHROMOSPHERE. George E. Hale - - - - - - 384
PHOTOGRAPH OF THE NEBULA NEAR 42 ORIONIS MADE AT THE ASTROPHYSICAL OBSERVATORY OF CATANIA. A. Riccò - 164
PHOTOGRAPHIC MAPS OF METALLIC SPECTRA. H. Crew - - 318
PRELIMINARY NOTE ON THE RADIATION OF INCANDESCENT PLATINUM. Harry Fielding Reid - - - - - - - - 160
THE BELGIAN ASTRONOMICAL SOCIETY - - - - - - - 168
THE VISIBLE SPECTRUM OF THE TRIFID NEBULA. W. W. Campbell 161

REVIEWS.

BEMERKUNG ZU DER ABHANDLUNG ÜBER LICHTEMISSION; G. Jaumann, by James E. Keeler - - - - - - - - - 241
BEOBACHTUNGEN ANGESTELLT AM ASTROPHYSIKALISCHEN OBSERVATORIUM IN O GYALLA, by James E. Keeler - - - - - 81
EIN NEUES SPECTRALPHOTOMETER; Arthur König, by James E. Keeler - - - - - - - - - - - - - 81

MOLECULES AND THE MOLECULAR THEORY OF MATTER; A. D. Risteen, by H. Crew - - - - - - - - - - 392
ON THE ELECTROLYSIS OF GASES; J. J. Thomson, by R. A. Fessenden - - - - - - - - - - - - 394
UNTERSUCHUNG DER SPECTRALEN ZUSAMMENSETZUNG VERSCHIEDENER LICHTQUELLEN; Else Köttgen, by James E. Keeler - 82
UNTERSUCHUNGEN ÜBER DIE SPECTRA DER HELLEREN STERNE; J. Scheiner, by E. B. Frost - - - - - - - - - 386
ZUR THEORIE DER VERBREITERUNG DER SPECTRALLINIEN; Fürst B. Galitzin, by H. Crew - - - - - - - - - 324

RECENT PUBLICATIONS - - - - 83, 169, 243, 328, 396

THE

ASTROPHYSICAL JOURNAL

AN INTERNATIONAL REVIEW OF SPECTROSCOPY
AND ASTRONOMICAL PHYSICS

VOLUME II JUNE 1895 NUMBER 1

THE MEASUREMENT OF SOME STANDARD WAVE-LENGTHS IN THE INFRA-RED SPECTRA OF THE ELEMENTS.

By EXUM PERCIVAL LEWIS.

THE investigation described in the following pages was begun nearly two years ago, with the object of extending Professor Rowland's table of standard wave-lengths beyond the region which can be studied by optical and photographic means. Owing to the difficulty of devising apparatus sufficiently sensitive to measure the small differences of temperature involved, and to the fact that continuous work on the experiment has been impossible, only a few wave-lengths have so far been determined. Although their measurement has not been so exact as in the case of visible lines, the result is a much closer approximation to the truth than has hitherto been obtained.

HISTORICAL REVIEW.

Before describing the experimental methods and discussing the results, a brief sketch of the most important work which has been done previously in this field will be given.

It appears that the first evidence of the existence of radiation beyond the red of the visible solar spectrum was discovered by

Sir William Herschel,[1] who, in 1800, observed a rise of the mercury in thermometers placed in that region. He also demonstrated that this radiation obeys the same physical laws as light itself.

In 1840 Sir John Herschel[2] studied this region of the solar spectrum by exposing in it a strip of paper covered on the back with lampblack and moistened with alcohol. While moist the paper was transparent, and revealed the dark background, which would gradually disappear as the liquid evaporated. He noticed that the alcohol dried more rapidly in some places than in others, and inferred from this the existence of several absorption bands in the infra-red of the solar spectrum. Unfortunately, Herschel did not use a slit, but threw the image of the Sun directly upon his prism. Under these conditions it has been doubted whether absorption bands could be detected. Lord Rayleigh and J. W. Draper repeated the experiment, and failed to secure definite results.[3]

J. W. Draper[4] discovered in 1842 the existence of three absorption bands, and indications of a fourth, in the infra-red of a photograph of the solar spectrum taken by him on a plate of iodide of silver.

In 1846[5] Fizeau and Foucault rediscovered these bands by means of mercurial thermometers with bulbs of small diameter; and they were again observed in 1871 by Lamanski,[6] who by means of a thermopile drew an intensity curve for the entire solar spectrum up to a wave-length of about 9400 Ångström units. Mouton[7] and Desains[8] subsequently investigated the distribution of energy in the solar spectrum in the same manner.

A very different method was adopted by E. Becquerel[9] for the

[1] *Phil. Trans.* 1800.
[2] *Phil. Trans.* 1840.
[3] *Phil. Mag.* 4, 348, 1877; *Phil. Mag.* 11, 159, 1881.
[4] *Phil. Mag.* 24, 456, 1842.
[5] *C. R.* 25, 449, 1847.
[6] *Pogg. Ann.* 146, 207, 1872.
[7] *C. R.* 87, 298, 1879.
[8] *C. R.* 95, 435, 1882.
[9] *C. R.* 69, 999, 1869; 77, 302, 1873; 83, 249, 1876

study of this region. He threw the spectrum formed by a carbon bisulphide prism upon a screen covered with phosphorescent material, and on the infra-red region superimposed the violet and ultra-violet spectrum formed by another prism. The phosphorescence excited by the superimposed rays would be extinguished by the infra-red radiation, while those portions of the screen on which absorption bands fell would remain faintly luminous. By the application of Cauchy's dispersion formula he then calculated the wave-lengths of these bands.

Henri Becquerel[1] repeated the experiments of his father by throwing the infra-red spectrum upon phosphorescent plates which had been exposed previously to sunlight. He noted two distinct phases in the resulting phenomena. First, especially if the previous exposure had been brief, the phosphorescence of those portions of the plate on which the radiation fell would be stimulated to greater activity, showing by contrast the spaces covered by absorption bands as dark lines, as in a positive photographic plate. After a short time the luminous energy of the over-excited parts of the plate would be exhausted, and the spectral bands would then appear bright on a dark background, as in a photographic negative. He used glass plates covered with various phosphorescent materials, such as the sulphides of calcium, barium, and strontium, and noted the important fact that there were certain regions of the spectrum characteristic of each substance in which no effect on the phosphorescence could be observed. These regions might easily be mistaken for absorption bands, and show the necessity for great caution in using this method. Becquerel examined the spectra formed by a diffraction grating in this way. From the overlapping spectrum of the second order he determined the approximate wave-lengths of bands in the solar spectrum up to about 14,000 Ångström units. He also used a prism calibrated in the infra-red by the solar bands measured as above, and from the phosphorographs of the spark and arc-spectra of various metals determined the approximate wave-lengths of some of the more prominent lines, which he

[1] *C. R.* 96, 121, 1883.

regarded as accurate to one or two millionths of a millimeter (ten or twenty Ångström units).[1] He also observed many diffuse bands which he believed to be groups of lines.

In 1880 Abney[2] succeeded in photographing the solar spectrum to a wave-length of about 10,000 Ångström units on bromide of silver plates prepared by a special process. A few years later he photographed the spectrum formed by a Rowland concave grating, and published an extended table of infra-red wave-lengths which he regarded as accurate to about one-tenth of an Ångström unit.[3] He attempted by the same process to photograph the infra-red arc-spectra of various metals.[4] In the case of sodium he succeeded in detecting the existence of a pair of lines of wave-lengths about 8187 and 8199. He does not give the probable error of these figures. In the spectrum of calcium he discovered evidences of lines having wave-lengths between 8500 and 8600. For all the other metals tried he obtained negative results.

E. Pringsheim[5] studied the distribution of energy in the solar spectrum for some distance in the infra-red by means of a Crookes radiometer. This instrument consisted of a narrow vane supported by a bifilar suspension. The deflections produced by radiation falling on the vane were indicated by a beam of light reflected from a mirror attached to it.

A most elaborate investigation of the infra-red of the solar spectrum has been carried on for many years by Professor Langley.[6] After attempting without success to obtain sufficient sensitiveness from a thermopile, in 1879 he devised the bolometer, which indicates temperature differences by the variation of the resistance of a small strip of platinum forming one arm of a Wheatstone bridge. He has gradually improved this instrument and the galvanometer which indicates variations of the current

[1] *C. R.* 96, 1217, 1883; 97, 71, 1883; 99, 374, 1884.
[2] *Phil. Trans.* 1880, p. 653.
[3] *Ibid.* 1886, p. 457.
[4] *Proc. R. S.* 32, 443, 1881.
[5] *Wied Ann.* 18, 32, 1883; *Phil. Mag.* 43, 282, 1872.
[6] *Proc. Am. Acad.* 16, 1881.

until, as he now states, it will indicate temperature differences almost as small as a millionth of a degree. He has investigated the distribution of energy in the solar spectrum up to a wave-length of nearly 60,000 Ångström units, or over a region about thirteen times as long as the visible spectrum, when expressed on the normal scale. To determine the wave-lengths of absorption bands he has used both the diffraction grating and glass and rock-salt prisms calibrated by comparison with a grating. Recently he has greatly improved the method of observation by substituting for the former tedious method of eye observation an ingenious automatic process of making the bolographs.[1] By another automatic device he translates the curves thus obtained into line spectra resembling the photographs of the visible spectrum.

A full account of Langley's recent work is given in the report for 1894 of the British Association. A note in THE ASTROPHYSICAL JOURNAL for February, 1895, briefly describes his method, and gives illustrations comparing the results obtained by Sir John Herschel, Lamanski, and Langley.

Draper[2] introduced an improvement in the phosphorographic method of investigating the spectrum. By placing sensitive plates of bromide of silver directly on the phosphorescent screen he succeeded in obtaining permanent images. Draper concluded from his experiments that it is an impossibility to secure well-defined maps of the spectrum in this manner, on account of the communication of phosphorescence from particle to particle. Lommel[3] has shown, nevertheless, that fair results may be obtained by this method. He has published some very good maps of the solar spectrum made in this way, and proposes to investigate metallic spectra by the same method. However, he did not succeed in securing any results beyond a wave-length of about 9500 Ångström units. Langley has also made some preliminary experiments in this direction.[4] Unfortunately, only the

[1] *Report of the Secretary of the Smithsonian Institution*, 1894.

[2] *Phil. Mag.* 11, 160, 1881.

[3] *Wied. Ann.* 40, 681, 1890.

[4] *Report of the Secretary of the Smithsonian Institution*, 1894.

strongest lines appear on such photographs, and the definition does not seem sufficiently sharp to allow very accurate measurement.

The results attained by the various methods above described have been qualitative rather than quantitative, and no systematic attempt has been made until recently to ascertain to what elements the absorption bands and lines are due, with the exception of the phosphorographic determinations made by H. Becquerel. Recently Snow[1] has investigated the prismatic spectra of the alkali metals with the bolometer for the special purpose of testing the applicability in the infra-red of certain empirical formulæ deduced by Kayser and Runge, which will be referred to later. A flint-glass prism was carefully calibrated by means of interference bands produced in the spectrum by thick glass plates. The positions of the maxima and minima of these bands were determined by a very sensitive bolometer to a wave-length of 26,680 Ångström units. The sensitiveness of the bolometer was estimated to be about $\frac{1}{180000}$ degree for one millimeter deflection on a scale three meters distant. A candle at a distance of one meter caused a deflection of 15^{cm}.

More recently Paschen[2] further improved the bolometer, reaching in some cases a sensitiveness estimated to be one-millionth of a degree for one millimeter deflection on a scale one meter distant from the mirror. Although he used a concave grating for the purpose of calibrating prisms, he seems to have made no determination of special wave-lengths.

There are two possible methods by which wave-lengths in the infra-red may be either directly or indirectly measured. One is the method of interference, of which Snow made use. Michelson[3] has shown that this method is capable of the highest precision, but as ordinarily applied the results are unsatisfactory, owing to the small distances between the maxima and minima and to the difficulty of determining their positions

[1] *Wied. Ann.* 47, 208, 1892; *Phys. Review*, July and August, September and October, 1893.

[2] *Wied. Ann.* 48, 273, 1893; 53, 287, 1894.

[3] *Phil. Mag.* March, 1891, p. 256; *A. and A.* 11, 884, 1892; *A. and A.* 12, 556, 1893.

accurately. Snow estimated the probable error of his readings on these bands to be about 5 parts in 1000. Moreover, his bolometer strip covered from 13 to 200 Ångström units, according to its position in the spectrum, and although his observations were made with great care the error in the visible spectrum was on the average about 11, and amounted in some cases to 50 or 60 Ångström units. These errors seem unavoidable in prismatic measurements, especially in the infra-red, owing to the great condensation of that end of the spectrum.

The second and by far the most reliable method of determining wave-lengths is by means of the grating. There are three ways by which this has been done—photographic, phosphorographic and thermometric. The application of the first method to the measurement of infra-red wave-lengths of the elements has proved to be a failure. The second, though greatly improved by Lommel, gives results which are deficient in detail and in definition. At present the last method seems the most satisfactory. The bolometer has given good results in prismatic spectra, but requires great improvement in sensitiveness to give satisfactory results with a diffraction grating, owing to the feeble intensity due to the multiplicity of spectra. For this reason it does not appear that anyone has yet succeeded in detecting the existence of isolated lines in the diffraction spectrum with the bolometer. Professor Langley used a concave grating of about 163^{cm} focal length and 3610 lines per inch for the purpose of calibrating his prism, but the radiation passing through the slit, which was 2^{mm} wide, was by no means homogeneous. In one of these determinations he estimated the probable error to be from 69 to 110 Ångström units, and even with a wide slit the maximum of his galvanometer readings was only about 6^{mm}.[1] Paschen calibrated a prism by a grating similar to that above mentioned, using a very sensitive bolometer, with a strip only $0^{mm}.25$ wide. He estimated the probable error of his individual observations to be from 30 to 100 Ångström units.[2]

[1] *Report of the Mount Whitney Expedition*, p. 220.

[2] *Wied. Ann.* 53, 287, 1894.

INSTRUMENTS AND METHODS.

From this review it will be seen that very little has been done towards the identification of lines due to the elements in the infra-red, and practically nothing in the way of their accurate measurement, determinations having been made either by gratings of small dispersion, or by means of calibrated prisms. The latter, at best, is a very imperfect method. It was desirable, therefore, to make some measurements with a grating of high dispersion, provided that means could be devised for detecting the small quantities of heat involved. The present investigation was begun by Mr. E. S. Ferry and the writer, with a bolometer. A detailed description of this instrument and of the efforts made to secure satisfactory results from it has been published.[1] Nothing need be added to the account except the statement that further trial demonstrated conclusively that no reliable results could be obtained from the bolometer under existing conditions.

The radiomicrometer, first used by D'Arsonval and independently invented and greatly improved by Boys, commends itself by its simplicity, its freedom from external disturbances, and its great sensitiveness. It was decided to test this instrument, although it has some serious disadvantages for spectrum work. It cannot well be moved through the spectrum, and the strip upon which the radiation falls, being free to vibrate, can neither be located so definitely, nor conveniently made so narrow as the strip of a bolometer. The first difficulty might be overcome by keeping the instrument in a fixed position and moving the slit and the source of light. Since it was intended to use a grating of high dispersion, the other objections were not very serious.

A vertical section of the instrument is shown in Fig. 1. A horseshoe magnet about 25^{cm} high, 4 wide and 2 thick, with a polar gap of 11^{mm}, is screwed vertically to a brass frame supported on a tripod. This magnet was made of chilled cast iron, and has been found to retain its magnetism very well on account of the long magnetic circuit and the short distance between its

[1] *Johns Hopkins Univ. Cir.* 13, No. 112; *A. and A.* November, 1894.

poles. At first the field was too strong, causing excessive damping of the coil, but after being somewhat weakened it proved perfectly satisfactory. By weakening the field, the effects of magnetic impurities in the wire were reduced, as these effects are proportional to the square of the intensity of the field, while the

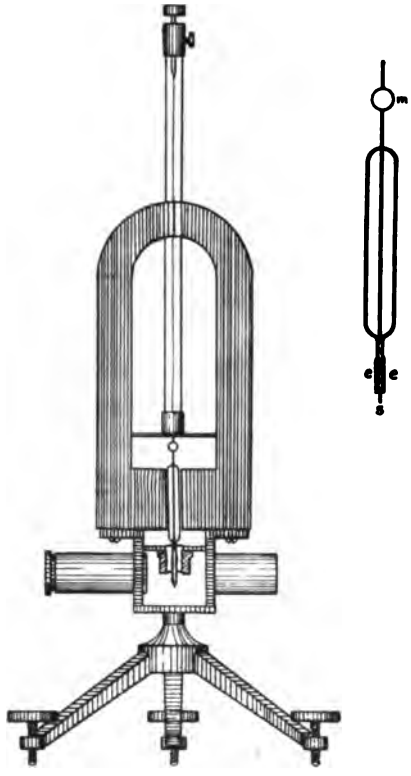

FIGS. 1 AND 2

deflections due to the current are directly proportional to the magnetic force. The loop of wire and the thermal element were suspended between the poles of the magnet by means of a fiber supported in a long glass tube passing through a hole in the bend of the magnet. The loop was completely enclosed by plates of brass screwed to the poles of the magnet. On one side

was a narrow glass window through which the loop could be observed, and light thrown on the mirror. The thermal element was enclosed by a soft iron tube to screen its diamagnetic material from the magnetic field. The radiation fell on one junction through a tube in front of the instrument, and the element and neighboring portions of the spectrum could be viewed through an eyepiece screwed into the back.

Several months were spent in efforts to make a satisfactory coil and element. The theory of the instrument has been completely worked out by Boys.[1] It was intended to test some of his conclusions by using various sizes of wire and of loop, and different numbers of turns in the coil. However, it was soon found that one difficulty completely overshadowed all the rest; this was to secure wire perfectly free from magnetic impurities. In the preliminary experiments about twenty different specimens of copper were used, and at least seventy-five loops and elements were made and tried, but no comparable results could be obtained. Not only was it impossible to secure great sensitiveness on account of the directive force of the magnetic impurities, but the lack of uniformity of the magnetic field made it difficult to keep the spot of light on the scale. In spite of all efforts to avoid it, the center of the field was less intense than the sides; consequently the tendency of the magnetic coil was to move into the strongest part of the field, so that its plane was at right angles to the lines of force. By fastening such coils in the proper position for several hours they appeared to become permanently magnetized, and when left to themselves would retain that position for some time. There seemed to be a slow viscous change, however, caused no doubt by the shifting of the axes of the magnetized particles, which would in time carry the spot of light off the scale to one side or the other. The magnetic directive force was so great that the fiber had no control whatever over the loop. On one occasion the torsion head was turned through thirty revolutions without perceptibly disturbing the position of the coil. Finally Dr. Ames succeeded

[1] *Phil. Trans.* 1888, p. 159.

in procuring, through the kindness of R. Brent Keyser, Esq., of the Baltimore Copper Company, a piece of very pure copper wire. After being drawn to the proper size (about $0^{mm}.3$ in diameter) its surface was cleaned with chemically pure nitric acid. Coils made of this wire, while not absolutely free from magnetic effects, were found to be easily controlled by a fine silk fiber. The coil used in the final experiments consisted of a single loop of this wire 5^{cm} long and $0^{cm}.6$ wide.

Great difficulties were experienced also in making the thermal elements. Some unsatisfactory tests were made with alloys, but subsequently pure bismuth and antimony were exclusively used. The bars were usually about one centimeter long, and from one-third to one-half millimeter cross section. At first they were made by grinding lumps of the metals down to thin plates and then cutting the bars from these by a fine saw or file. Both metals are difficult to work, and at least nineteen out of twenty of the bars were broken while being made. It was found, however, that these elements could be made very easily by a method due to Noll.[1] The melted metal was sucked up in small thin-walled capillary glass tubes, which were then broken off to the desired lengths. It was difficult to remove the tube from the enclosed metal, so that in most cases it was allowed to remain as an insulation between the two bars, which were bound firmly side by side. Next they were soldered to the ends of the loop of copper wire, and their lower ends joined by a strip of thin copper about one millimeter wide and several millimeters long. A glass fiber was fastened by shellac to the copper loop, and on this was placed a small concave mirror of about one meter focus. The loop was suspended by a fiber, and the deflections were read by means of the image of the filament of an incandescent lamp reflected on a millimeter scale.

The early attempts to obtain measurable deflections in the spectrum of a high-dispersion grating were failures. Success was first attained with Professor Langley's grating, referred to above, which was kindly loaned for the purpose. As adjusted for this

[1] *Wied. Ann.* 53, 874, 1894.

test, the strip of the radiomicrometer covered about 40 Ångström units in the spectrum. With sodium chloride burning in the arc, and the strip set over the D lines, deflections of about one millimeter were at first obtained. At Professor Rowland's suggestion a cylindrical lens was then placed with its axis parallel to the spectrum so as to shorten the images of the spectral lines and concentrate them entirely upon the strip, which was reduced to about two millimeters in length. By this means deflections of about one centimeter were obtained, but it was impossible to separate the D lines. Since it was very desirable to obtain more accurate results, attempts to use a grating of higher dispersion were resumed. The one finally used was concave, of about fourteen feet focus, and was ruled with 10,000 lines to the inch. The first spectrum was exceptionally bright, and was visible beyond the usual limit at the red end. By substituting a smaller element on the coil previously alluded to the single D lines caused deflections almost as great as those made by both lines in the spectrum formed by Professor Langley's grating. The length of the element was $1^{cm}.3$, the width of the copper strip $0^{cm}.07$, and its length $0^{cm}.2$. This loop was suspended by a silk fiber, no quartz fibers of sufficient fineness being on hand. This coil is represented in Fig. 2; *e* and *e'* are the bars, *s* the strip soldered between their ends, and *m* the mirror. The various coils made were tested by observing the deflections caused by a candle ten feet distant. With different elements tested the deflections were from one to fifteen centimeters. Comparisons of this kind are, however, no test of the sensitiveness of the element when exposed to a spectral line. As an instance of this, with the coil finally used the deflection caused by the candle was only two centimeters, yet in the spectrum it was far more sensitive than the one mentioned above from which a deflection of fifteen centimeters was obtained. The strip of the latter was twelve square millimeters in area, while that of the former was only 1.4 square millimeters. The cross section of the elements was about the same in the two cases. The size of the strip determines the quantity of heat supplied to the junction,

while the cross-section of the elements determines the amount which flows away, so that the temperature of the junction is evidently a function of the relative area and cross-section. There is no advantage, however, in having the width of the strip greater than that of the spectral lines, and when a cylindrical lens is used to shorten the lines, as in this experiment, it is advantageous to have the area of the surface which receives the radiation of exactly the same size as the image of a line. The possibility of concentrating the radiation in this manner is one great advantage which the radiomicrometer possesses over the bolometer, in using which nothing is gained by making the line shorter than the bolometer strip. The bolometer used in the beginning of this experiment gave a deflection of about three centimeters when exposed to a candle ten feet away, making it apparently more sensitive than the radiomicrometer element which gave only two centimeters deflection, but the area of the bolometer strip was eight times as great. Moreover, the cylindrical lens practically increased the sensitiveness of the radiomicrometer eight or ten times.

In addition to its greater sensitiveness, the radiomicrometer is far more reliable in its indications than the bolometer. When using the latter, nearly all the time of an experiment was spent in adjusting the resistance to balance the drift which constantly manifested itself. The necessary lightness of the galvanometer system also made it impossible to secure steadiness of the spot of light, and thermal effects in the circuit gave trouble. The radiomicrometer is perfectly free from these objections, and if it were possible to move it through the spectrum it would be an ideal instrument.

The arrangement of the spectrometer is shown in Fig. 3. An iron beam, *B*, 15 feet long, is supported on a truck at each end. These trucks roll on two rails, *A* and *C*, placed at right angles. At one end of the beam and adjusted perpendicularly to it is the concave grating *G*. At the other end is the slit *S*, beyond which is attached a box carrying an arc lamp *L*. At the intersection of the rails is the radiomicrometer *R*. The

theory of the concave grating[1] shows that under these conditions the radiomicrometer will always be in focus as the beam carrying the grating and the source of light is displaced, and that the distances through which the slit moves as measured on the rail *A* are proportional to the wave-lengths of the lines which are

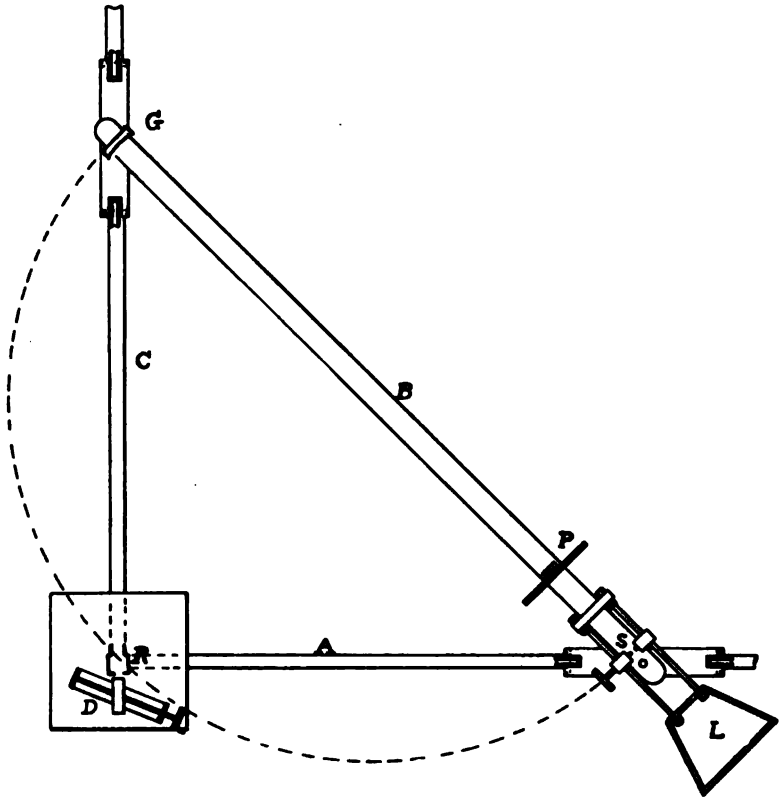

FIG. 3

observed at *R*. The wave-length of any line on which the strip is set may therefore be determined by moving *L* so as to bring known lines successively upon the strip and measuring the distances over which the slit has been moved. Since errors might

[1] ROWLAND, *Am. Jour.* 27, 1883. Ames, *Phil. Mag.* 27, 1889. *A. and A.* January, 1892.

arise from flexure of the beam, an attempt was made to use another plan. The eyepiece of the radiomicrometer was removed, and the opening covered with a piece of plane glass. In front of the instrument was placed a dividing engine *D*. On the carriage of the dividing engine was an eyepiece, and it was intended when the strip coincided with an invisible line to set the cross-threads of this eyepiece first on the strip and then on the neighboring known lines of the overlapping second spectrum. The spectra of a concave grating adjusted as in this case lie upon the circumference of a circle (indicated by the dotted line) having the iron beam for a diameter; hence in order to bring lines occupying different positions into the focus of the eyepiece it was necessary to place the dividing engine tangentially to this circle and at an angle with the rail, as shown in the figure. The screw of the dividing engine would, however, be tangent to the circle of spectra only for one position of the beam; consequently it was found impossible in general to bring the lines into focus, and in most of the experiments distances were measured directly on the rail by means of a steel millimeter scale and a vernier reading to tenths. The rail *A* was of such length that the first spectrum could be investigated to about wave-length 16,000.

The arc light was supplied with a current of 22 amperes, under an electromotive force of 110 volts. The carbons used were about one centimeter in diameter. Holes about $1^{mm}.5$ in diameter were drilled in both the positive and negative carbons and filled with a salt of the element under investigation. An image of the arc was thrown by a small glass lens on the slit, which was about $0^{mm}.7$ wide, so that the image of a line would about cover the radiomicrometer strip. The slit itself was mounted on a micrometer screw, so that in cases where the dividing engine was used in measuring distances to known lines the beam could be clamped, the slit moved and the deflections for successive positions plotted. From the curve drawn from these results the position of maximum intensity could be found, the slit set in that position, and distances between the strip and known lines of the second spectrum measured with the dividing

engine. Whenever readings were taken directly on the rail the slit was kept in a fixed position relative to the beam, and the readings were taken by moving the lamp and slit up and down the rail so as to bring known lines of the spectrum upon the radiomicrometer strip. Small quantities of calcium and iron were mixed with the salt to be studied in order to furnish comparison lines.

Unless the grating, the source of light, and the radiomicrometer are exactly on the vertices of a right-angled triangle, the distances on the rail will not be strictly proportional to the wavelengths. No measurable deviation from proportionality could be observed in this case, however, and it was found that comparison lines some distance from the line which was to be measured gave quite as consistent results as those which were nearer.

At P is a screen which prevents the radiation of the arc from falling on the grating. Whenever an observation is to be taken, the slit is set in the desired position and this screen raised. If the strip is set upon a hot line, a deflection will be observed. In about ten seconds this will reach its maximum. On lowering the screen, the coil will slowly return toward its initial position, its motion being perfectly dead-beat. On account of the viscosity of the silk fiber it scarcely ever returns entirely to its zero point; for this reason only the direct deflections are usually observed.

The room in which the observations were taken is on the fourth floor of the physical laboratory. At first great difficulty was experienced from the vibrations of the building, caused by the wind, and by the passing of cable or electric cars, or of loaded wagons over the cobble stones in the street below. This was almost entirely obviated by mounting the radiomicrometer on several slabs of marble and iron laid over each other, with strips of rubber between them. Except when the wind was blowing or heavy vehicles passing, the spot of light was then almost perfectly steady, so that no trouble was found in reading deflections to $0^{mm}.1$.

There are several sources of error which must be taken into account. One millimeter on the rail A corresponds to about

four Ångström units. The strip itself covers a width of three Ångström units in the spectrum. In plotting the curve of intensity of each line there was a probable error in locating the maximum of about $0^{mm}.1$, or 0.4 of an Ångström unit. The setting on a comparison line was also somewhat uncertain, owing to the width of the slit. Errors could also be introduced from flexure of the iron beam, and from mistakes in reading the vernier. A number of settings on known lines showed that the maximum error due to these three causes was $0^{mm}.15$ or 0.6 of a unit. The radiomicrometer strip might also be accidentally displaced during a series of observations. This was guarded against by setting the cross-threads of the dividing engine eyepiece upon it, and examining its position from time to time. All these errors are as likely to occur in one direction as another, and in the course of a long series of observations would largely neutralize each other. An apparent displacement of the maximum of an intensity curve may also arise from irregular burning of the salt in the arc. This was eliminated as far as possible by running the slit first in one direction and then in the other while observing the deflections, so as to average the intensity during a considerable period. One difficulty that seemed to be without remedy was due to the use of the cylindrical lens for focusing the spectral lines on the strip. These lines have two foci—the first, which determines the definition, is that of the grating itself; the second, which determines the maximum shortening of the lines, is that of the lens. In order to secure the greatest heating effect, the strip was placed in the latter focus, by which means the definition of the lines was so impaired as to make accurate settings on comparison lines difficult.

Although the region investigated was under the second spectrum, the latter was very feeble, and no trouble was experienced on this account. At points where deflections were observed, eye observations would at once determine whether they were due to visible or invisible lines. By making observations with and without the salt under investigation in the arc, it could also be determined whether any line found in the infra-red was due to that substance.

RESULTS.

SODIUM.

Before undertaking any systematic investigation of the infra-red spectrum of any one element, it was deemed advisable to endeavor to make accurate measurements of some of the more intense lines whose positions had been approximately determined by Becquerel and by Snow. A search was first made for the sodium lines which these observers found at wave-lengths 8190 and 8180 respectively, and which had been shown by Abney to be double. The pair was soon found, and a number of observations made upon them. In order to guard against error, their curves were mapped repeatedly. The results are shown below. In order that these observations might be as absolutely unprejudiced as possible, the position of the radiomicrometer was slightly shifted before each series of observations, but in the curves here given the readings are all reduced to the same origin in order that comparisons may be more easily made. As an indication of the great labor and the time required in making these measurements it may be mentioned that the curves for this one pair of lines represent the observation of over 800 deflections, not counting those which were observed in looking for the lines.

Below is a typical set of readings, the results of which are shown in curve No. 1, Plate II. Four deflections were observed in each position of the slit, two being taken while moving the slit up the rail, the others when moving it back. The deflections are in millimeters, and the numbers at the head of each column represent the readings on the rail, in centimeters:

55.5	55.55	55.6	55.65	55.675	55.7	55.725	55.75	55.8
2	3	4	5.3	7	5	5.6	1.8	3
1.5	2.5	3.6	5	5	6.8	3	2.2	0
1.7	2	4.5	5	5.5	8.4	4.8	3.5	2
2	4	3.6	7.1	5.4	7.2	4	2.6	0.5
1.8	2.9	3.9	5.6	5.7	6.8	4.3	2.5	1.4

PLATE II

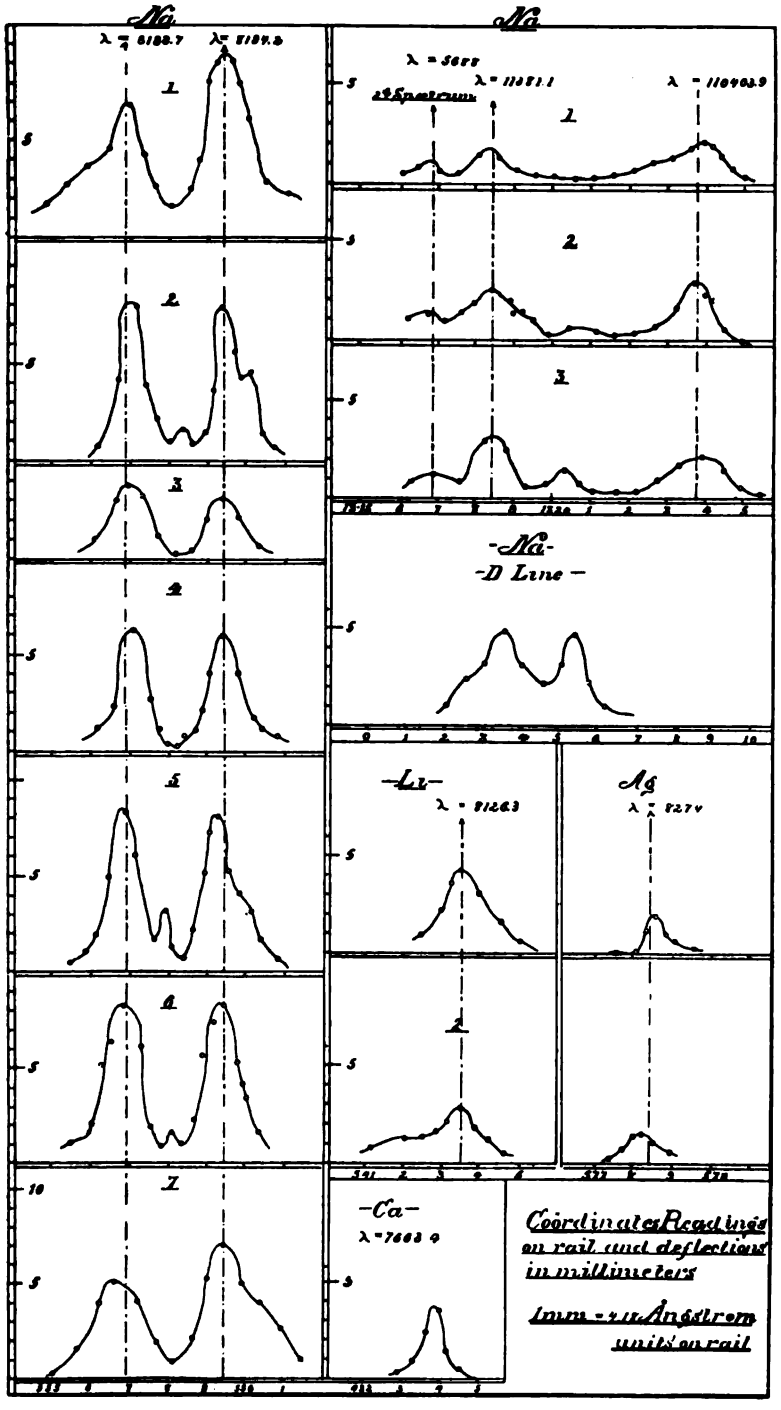
Na
Na
-Na-
-D Line-
-Li-
Ag
-Ca-
Coördinates Readings on rail and deflections in millimeters
1mm = 4.17 Angstrom units on rail

55.85	55.875	55.9	55.925	55.95	55.975	56.0	56.05	56.1
2	3.5	8.1	8.8	9	8.4	6.2	3.2	1.8
2.8	3.5	10	9	10.5	6.8	6.3	1.8	2
2.5	4.4	7.2	8.5	7.8	8	6.8	3.1	3
3.5	5.0	7.5	10	10	8.6	6	3.8	2.6
2.7	4.1	8.2	9.1	9.3	8	6.3	3	2.6

The agreement between these curves is in general very good. There are differences in their height due to varying quantities of salt in the arc, but the positions of their maxima correspond as well as could be expected. In three of these curves (Nos. 2, 5 and 6) there are indications of a feeble line between the pair due to some impurity. A slight irregularity on the right side of one of the lines seen in curves Nos. 2, 5, 7, may be due to an iron line in the second spectrum of wave-length 4098.3, since a small quantity of iron was used in the arc to produce comparison lines. No evidence of reversal is perceptible. In fact, on account of the width of the strip, the only result of reversal would be a slight flattening of the curves. The deflections obtained from the D lines were about the same as those for this pair, indicating that they are of about equal intensity.

On one or two occasions, when a large amount of salt was in the arc, this pair of sodium lines was barely visible. They were so hazy and diffuse, however, that no eye measurements could be taken.

Below are the wave-lengths of the sodium pair as determined from the various curves. In cases where readings were taken on the rail, the wave-lengths were calculated for the first line, and to the average of these results (each of which was determined from one comparison line) was added the number of units corresponding to the distance between the maxima on the curve in order to obtain the second line. In the set of readings obtained from the dividing engine independent determinations were made

for each line. In the second set of observations only two readings on comparison lines were obtained, owing to an accidental displacement of the dividing engine. (Columns marked D were measured by the dividing engine; those marked R direct on the rail).

1 (R)	2 (D)	3 (R)	4 (D)	5 (R)	6 (R)	7 (R)
8184.19	8184.14	8183.54	8184.50	8183.76	8183.71	8182.67
8184.31	8184.52	8183.66	8183.89	8183.27	8183.58	8182.57
8182.96		8184.16	8184.44	8183.17	8184.27	8182.55
8184.70		8184.24	8184.41	8183.64	8183.26	8182.56
8182.53		8183.83	8183.69	8183.75	8182.53	8183.36
8184.11					8183.94	
8183.52						
8183.73	8184.33	8183.84	8184.19	8183.52	8183.55	8182.74

General average, 8183.73.

			8194.15			
			8194.08			
			8194.43			
			8194.09			
			8193.17			
10.63		10.87		10.44	10.44	11.69
8194.36		8194.71	8193.98	8193.96	8193.99	8194.43

General average, 8194.24.

The close agreement between these results indicates that the error of the mean can hardly be as great as one Ångström unit, and probably does not exceed 0.5.

It should be noted that Abney did not claim any great accuracy in his measurement of this pair. The nearest lines to the above given in his table for the solar spectrum are 8184.4 and 8193.4, to which must be added about 1.4 to reduce from Ångström's to Rowland's scale, giving 8182.8 and 8194.8.

Balmer showed that the wave-lengths of certain series of lines in the hydrogen spectrum could be represented with surprising accuracy by the empirical formula $\lambda = h\frac{n^2}{n^2-4}$, n representing the successive ordinal numbers above 2 and h a constant.[1] Later Kayser and Runge showed that in the spectra of nearly all the elements there are series of lines whose positions can be expressed by empirical formulæ of the form

$$\frac{1}{\lambda} = A + Bn^{-2} + Cn^{-4} + \ldots\ldots$$

where $\frac{1}{\lambda}$ is a number proportional to the frequency and n represents the successive ordinal numbers.[2] They have also found that in cases where series of pairs occur, as in the case of sodium, the difference of the values of $\frac{1}{\lambda}$ between the two members of any pair is a constant for that element. The average value of this difference for sodium is 172. The difference shown by the above results is 160, which is as close agreement as is found with some pairs in the visible spectrum. Kayser and Runge have predicted from their empirical formulæ the occurrence of various lines in the infra-red. They appear to have used Abney's values for the pair discovered above, reduced to Rowland's scale, for the determination of the constants of their formulæ for sodium, and have predicted the existence of another pair of wave-lengths 11481.8 and 11504.8, which perhaps correspond to a line discovered by Becquerel of wave-length 11420 and given by Snow as 11320. The neighborhood of the spectrum corresponding to these lines was explored several times without success. At last, by using large quantities of sodium chloride in the arc, they were discovered just above the sodium pair 5682 and 5688, in the second spectrum. The readings made on them were as follows:

[1] *Wied. Ann.* 25, 80, 1885.

[2] *Abhand. d. K. Akad. d. W. Berlin*, 1888–93.

	I	II	III
	11378.26	11381.35	11381.76
	11381.72	11381.59	11382.00
	11382.43	11381.05	11381.46
	11381.50	11379.84	11380.68
	11380.50	11380.93	11381.77
	11380.88	11380.95	11381.53
Add distance, between maxima	23.20	22.57	22.60
	11404.08	11403.52	11404.13

General averages ..... 11381.12 / 11403.91

The agreement of these observations is not so good as of those lower in the spectrum on account of difficulty in focusing on comparison lines. The intensity of these lines seems about one-third that of the other infra-red pair. Their difference in frequency is 176.

No absorbents were used to cut out the second spectrum in these observations. As is well known, sodium or potassium in the arc will almost eliminate the carbon spectrum, and visible lines were easily avoided. That the lines were actually due to sodium was demonstrated by the fact that no deflections were obtained unless sodium was in the arc.

The results for sodium are compared with those of other observers below:

Becquerel	Snow	Abney	Kayser and Runge (calc.)	Lewis
8190	8180	8187	——	8183.7
—	—	8199	——	8194.2
11420	11320	--	11481.8	11381.1
—	—	—	11504.8	11403.9

LITHIUM.

Snow found a lithium line of wave-length 8110, while Kayser and Runge predicted its occurrence at about 8190. They considered, however, that under the circumstances this was a sufficiently close agreement with Snow's result. I have found

this line and made the following measurements of its wave-length:

I	II
8127.03	8125.91
8125.86	8126.03
8126.99	8126.99
8125.97	8126.43
8126.47	8125.52
8126.08	.....
8126.40	8126.16

General average, 8126.3

Becquerel gives no results for lithium.

SILVER.

Becquerel gives the wave-lengths of two silver lines as 7710 and 8250, and describes them as being very intense. Kayser and Runge predict the existence of silver lines of wave-lengths 7695 and 8282. A line apparently corresponding to the last was found without difficulty. Below are the measurements:

I	II
8274.49	8273.29
8274.52	8272.99
8274.00	8274.13
8274.47	8273.97
8275.29	8273.32
8274.55	8273.54

General average, 8274.04

While searching for the other line, rather feeble indications of its existence were given by the radiomicrometer. The line was found to be faintly visible, and its wave-length was determined by eye observations as follows:

7687.79
7687.91
7688.44
7689.14
7688.65
7688.4

CALCIUM.

A systematic search for calcium lines in the infra-red was begun, but so far it has been unsuccessful except in the case of a line which is faintly visible. The result is an evidence of the reliability of the radiomicrometer. By means of it alone the line was found and its wave-length determined as follows:

7663.38
7663.30
7664.06
7662.60
7663.81
7663.43

It was subsequently found to be visible under favorable conditions, and from eye observations its wave-length was determined to be 7663.76. This is almost coincident with a strong potassium line, but since the deflections caused by it were greater than those obtained when potassium was burning in the arc, it is probably really due to calcium, and not to traces of potassium.

Becquerel observed indications of groups of calcium lines between 8580 and 8880. A preliminary survey has been made of this region, without discovering any intense lines. The curves for lithium, silver and calcium lines show no marked peculiarities. The investigation will be continued and it is hoped that other lines may shortly be discovered.

An effort was made to determine the position of several potassium lines discovered by Becquerel and Snow, but on account of their feeble intensity they could not be detected with certainty.

Several improvements in the radiomicrometer have suggested themselves during these experiments, but have not been adopted on account of lack of time. The copper wire used for the loop should be drawn through jeweled plates in order to avoid all contact with iron. By using copper which is absolutely pure, and suspending the coil by a very fine quartz fiber, there seems to be hardly any definite limit to the possible sensitiveness of this instrument. The coil should also be lighter, in order that it

may respond more quickly to heating effects, and the width of the strip should be less in order to have greater resolving power in the spectrum. In order to prevent losses by absorption, which would be very serious further in the infra-red, lenses should be dispensed with and the image of the arc thrown upon the slit by a concave mirror. The radiation should be focused upon the strip by means of a cylindrical parabolic mirror, cut away near the vertex to allow the strip to be placed at the focus. The arc and slit should also be mounted on a carriage moved by a micrometer screw, so that more accurate measurements can be taken.

My thanks are due to Professor Rowland and to Dr. Ames for their suggestions and for their continued encouragement at times when success seemed almost hopeless.

JOHNS HOPKINS UNIVERSITY,
May, 1895.

ON THE DISTRIBUTION IN LATITUDE OF SOLAR PHENOMENA OBSERVED AT THE ROYAL OBSERVATORY OF THE ROMAN COLLEGE IN 1894.

By P. TACCHINI.

I HAVE obtained the following results on the distribution of the solar phenomena observed here during the year 1894:

PROMINENCES.

Latitude	First Quarter		Second Quarter		Third Quarter		Fourth Quarter		Year	
90°+ 80°	0.000		0.005		0.000		0.000		0.001	
80 + 70	0.000		0.003		0.000		0.000		0.001	
70 + 60	0.003		0.003		0.016		0.000		0.006	
60 + 50	0.018		0.010		0.002		0.012		0.011	
50 + 40	0.008	0.324	0.046	0.355	0.059	0.430	0.045	0.439	0.040	0.387
40 + 30	0.039		0.086		0.093		0.037		0.064	
30 + 20	0.080		0.073		0.082		0.119		0.089	
20 + 10	0.088		0.078		0.080		0.148		0.096	
10 . 0	0.088		0.051		0.098		0.078		0.079	
0 — 10	0.057		0.071		0.100		0.074		0.076	
10 — 20	0.065		0.068		0.107		0.102		0.085	
20 — 30	0.111		0.137		0.141		0.143		0.133	
30 — 40	0.103		0.081		0.104		0.172		0.115	
40 — 50	0.013	0.676	0.035	0.645	0.014	0.570	0.021	0.561	0.021	0.613
50 — 60	0.015		0.000		0.000		0.033		0.012	
60 — 70	0.222		0.099		0.011		0.000		0.083	
70 — 80	0.080		0.106		0.070		0.008		0.066	
80 — 90	0.010		0.048		0.023		0.008		0.022	

Thus the prominences have invariably been most frequent in the southern zones, a peculiarity which was also noted for the year 1893, and for the last three quarters of 1892, with the characteristic fact of a secondary maximum in the zone (—60°—70°). In the regions about the north pole the prominences have always been faint and very infrequent.

FACULÆ.

Latitude	First Quarter		Second Quarter		Third Quarter		Fourth Quarter		Year	
50°+ 40°	0.000		0.000		0.000		0.004		0.001	
40 + 30	0.005		0.018		0.000		0.004		0.007	
30 + 20	0.072	0.433	0.097	0.466	0.074	0.437	0.029	0.347	0.068	0.421
20 + 10	0.159		0.197		0.185		0.139		0.170	
10 . 0	0.197		0.154		0.178		0.171		0.175	
0 — 10	0.197		0.149		0.130		0.180		0.164	
10 — 20	0.192		0.210		0.192		0.241		0.209	
20 — 30	0.120	0.567	0.140	0.534	0.167	0.563	0.175	0.653	0.150	0.579
30 — 40	0.048		0.035		0.067		0.045		0.049	
40 — 50	0.010		0.000		0.007		0.012		0.007	

The faculæ, like the prominences, have been most frequent in the southern zones, but the maxima for single zones have occurred in lower latitudes.

SPOTS.

Latitude	First Quarter		Second Quarter		Third Quarter		Fourth Quarter		Year	
40°+ 30°	0.000		0.000		0.008		0.000		0.002	
30 + 20	0.062	0.391	0.094	0.438	0.034	0.453	0.026	0.429	0.054	0.428
20 + 10	0.185		0.208		0.180		0.156		0.182	
10 . 0	0.144		0.136		0.231		0.247		0.190	
0 — 10	0.155		0.167		0.111		0.156		0.147	
10 — 20	0.330	0.609	0.281	0.562	0.359	0.547	0.363	0.571	0.333	0.572
20 — 30	0.103		0.104		0.077		0.052		0.084	
30 — 40	0.021		0.010		0.000		0.000		0.008	

The spots agree with the other solar phenomena in having their greatest frequency in the zones south of the equator. As other observers must also have noted, the most beautiful spot groups have been found only in the southern hemisphere. Metallic eruptions have been extremely uncommon, but we have found indications of eruption in the southern hemisphere. It thus follows that the manifestations of solar activity were most marked in the southern hemisphere from the second quarter of 1892 to the end of 1894. This indicates that the solar rotation cannot determine the production of the phenomena in question.

R. OSSERVATORIO DEL COLLEGIO ROMANO,
March 29, 1895.

A REVIEW OF THE SPECTROSCOPIC OBSERVATIONS OF MARS.

By W. W. CAMPBELL.

MY paper on "The Spectrum of Mars"[1] has been frequently criticised; sometimes favorably, again unfavorably, but always courteously. If the paper were now to be rewritten, two small changes would be made. They are:

1. The word "aqueous" would be omitted from the concluding paragraph, which reads, "While I believe the polar caps on Mars are conclusive evidence of an atmosphere and aqueous vapor, I do not consider that they exist in sufficient quantity to be detected by the spectroscope." The vapor is probably "aqueous," but the phenomena of the caps neither prove nor disprove that it is, and so long as many observers report phenomena of that planet which do not seem to have analogues on the Earth, we are not justified in deciding, from analogy, that the caps are aqueous.

2. In preparing my paper, I computed the relative quantities of vapor existing in the Earth's atmosphere at the times when the principal European observations were made and when my own were made. There was no evidence that the early observers selected "dry" nights, whereas at Mt. Hamilton the hygrometric conditions were always consulted before observations began; and in fact those conditions determined whether the observations should be made, or delayed. To express the fact that we had very much less aqueous vapor to contend with than the European observers had, I used the term relative humidity. Professor Young kindly pointed out, in January, that I should have said absolute humidity. I at once called attention to the error in the *Observatory* for March, and am glad to refer to it again here. However, the use of an erroneous term to express the general fact does not in the least affect the observations in question, as will appear in the sequel.

[1] *Pub. A. S. P.* 6, 228–236.

Professor Vogel does not agree with me that the large telescope of the Lick Observatory possesses considerable advantages over small telescopes for studying planetary spectra. He says that since his "telescope has a ratio of aperture to focal length of 1 : 10, it is considerably more efficient with respect to brightness than the Lick telescope."[1] So far as the two telescopes are concerned that statement is correct; the Potsdam telescope forms a focal image of Mars which is 3.7 times as bright as that formed by the Lick telescope. But I would call attention to the principle, so ably stated by Professor Keeler on several occasions, that the brightness of the spectrum depends not only upon the brightness of the image on the slit-plate, but also upon the dimensions of the various parts of the spectroscope. The question is not whether the Potsdam telescope is considerably more efficient with respect to brightness than the Lick telescope, but whether that advantage was utilized in Professor Vogel's observations of Mars' spectrum. In my opinion it was not, as the following computations will show:

The Potsdam telescope has aperture $35^{cm}.2$, ratio 1 : 10, and therefore focal length 352^{cm}. The Lick telescope has aperture $91^{cm}.4$, focal length 1763^{cm}, and ratio 1 : 19.3. The Potsdam image of Mars was 3.7 times as intense as mine, but only one-fifth the diameter of mine. His collimator and observing telescope were 20^{cm} long,[2] while mine were respectively $52^{cm}.1$ and $26^{cm}.7$. We must assume that both used the same angular width of slit. Since the linear width of my slit was 2.6 times his, and the image of Mars had five times the diameter of his, the area of slit utilized by me was 13.0 times that utilized by him; and since his image was 3.7 times as intense as mine, it follows that 3.5 times as much light entered my spectroscope as entered his. How was the light distributed in the spectrum? That depends upon the prisms and eyepieces employed. Using the same prism and eyepiece, my spectrum was 2.6 times as wide as his, 1.3

[1] THE ASTROPHYSICAL JOURNAL, 1, 206.

[2] At my request Professor Vogel kindly sent me the dimensions of his "Spectrograph IV."

times as long, and 6 per cent. brighter.[1] If he used sufficient magnifying power to render the two spectra equal in length, my spectrum was still 1.9 times the width of his, and 82 per cent. brighter. Further, the physiological advantage of the wider spectrum in this problem must not be forgotten.

Again, Professor Vogel believes "that in the endeavor to go too far into details, Mr. Campbell has always employed too high a dispersion." There are several passages in my paper which refer to that point. Let me quote one: "Now while all these [aqueous vapor] lines can be observed individually in the solar spectrum, owing to the high dispersion which can be used, they can only be observed as groups or bands in the Martian and lunar spectra on account of the faintness of those spectra and the low dispersion which must be employed." Professor Vogel's Potsdam observations were made on one night only with "Spectrograph IV" exclusively, which gives a dispersion of $8^{mm}.6$ from $H\beta$ to the mean of $H\epsilon$ and K. My "observations were made principally with a dense 60° flint prism, with magnifying powers of 13 and 7, and occasionally with 30° prism and power 13." The dispersion with the 30° prism is $2^{mm}.7$ from $H\beta$ to the mean of $H\epsilon$ and K, less than one-third that employed by him. Making allowance for my possibly higher magnifying power, the lowest dispersion used by me was hardly more than half that used by him.

Professor Vogel attaches little or no weight to the fact that the absorption bands seem no stronger at the limb (where the atmosphere is deepest) than they do at the center of the disk (where the atmosphere is thinnest); and neither do I, if the observations were made with short telescopes and under other unfavorable circumstances. My best observation on that point was made September 7, with the circumstances as follows: Mars near meridian, altitude 62°; diameter, $18''.2$; 30° prism; length of view telescope, $52^{cm}.1$; eyepiece magnifying 26 diameters; seeing V, the best known at the Observatory; dew point (at 7.00

[1] I have neglected my greater loss by telescopic absorption, and his greater loss by atmospheric absorption.

A.M.), 38°; several bands, especially α, examined for increase of absorption at limb of planet; no increase perceptible. The circumstances could hardly have been better; the apparatus was efficient for giving great width of spectrum; the planet was near the zenith; the edges of the planet were sharply defined. In my opinion the observation "greatly strengthens the view that Mars does not have an extensive atmosphere."

Likewise Professor Vogel does not agree that Thollon's maps are of special assistance in this problem. Let us consider their application at a single point, say at the band δ.[1] With low dispersion, there is a dark band in the spectra of Mars and the Moon practically in the position of the critical band δ; but I found, from observations of the solar spectrum with weak and with strong dispersions, that Thollon's maps are correct in ascribing that band almost wholly to the solar metallic lines. While there are many weak aqueous vapor lines within the limits of that band, there are also many very prominent lines of purely solar origin. In our dry summer weather, with the Sun only 10° above the horizon (when we are looking through six thicknesses of our atmosphere), the combined solar lines formed a band several times as dense as the coincident δ band formed by the vapor lines. Thollon's maps are equally advantageous in reference to the other critical bands. It is a fact that nearly all the aqueous vapor lines, with low dispersion, are hopelessly blended with much stronger solar lines. Thollon's maps are the best maps I know of for putting the observer on his guard against the superior strength of the purely solar bands.

Mr. Lewis E. Jewell has recently published[2] an interesting paper on the relation existing between the quantity of aqueous vapor in the Earth's atmosphere and the *minimum visible* of the vapor lines in the telluric spectrum. While Mr. Jewell's results undoubtedly bear upon the question of detecting vapor in Mars' atmosphere, as well as in our own atmosphere, I consider that

[1] Professor Vogel's recent observation of water vapor on Mars depends largely upon his observations of the δ band.

[2] THE ASTROPHYSICAL JOURNAL, 1, 311–317.

the method used at Mt. Hamilton has a more direct and practical bearing than that used by him. While the observations of Mars' spectrum were making, I observed the apparent solar spectrum under a great variety of circumstances. I verified Thollon's maps, in so far as the strongest vapor lines in all the principal vapor groups are concerned, by observing them with the Sun at high and at low altitudes, on very dry and on rather damp days, using a grating of 14,438 lines to the inch in the second order. Thollon's maps were, at the same time and in the same manner, compared with Rowland's photographs of the telluric regions of the spectrum. By observing the solar spectrum on numerous occasions at low altitudes and at the same altitudes that Mars was to be observed at, using the same dispersions that Mars was to be observed with, I made myself familiar with the exact locations, surroundings, intensities and relative values of the various vapor bands. It is probable that more time was spent observing the solar spectrum than in observing Mars and the Moon. I consider that to be the only suitable method of preparing for the work.

Mr. Jewell believes that my observations were made in the months when the Earth's atmosphere contains the most moisture He supports that point by publishing a table showing the average amount of vapor in the Earth's atmosphere at Baltimore for each month of the year 1893. He finds that in June, July and August there was 3.4 times as much vapor in the air (at Baltimore) as there was in the winter months December, January, February. Mr. Jewell has sustained his point so far as Baltimore is concerned. But this has very little to do with deciding when observations should be made at Mt. Hamilton, as the following table will prove. It is compiled from the 9 P.M. thermometer readings in 1894—the year when my observations were made:

	Average dry bulb	Average dew point	Vapor per cu. ft.	Minimum dew point
January	36° F.	29° F.	1.9 grains	15° F.
February	35	28	1.8	9
March	40	32	2.1	25
April	48	31	2.0	18
May	49	41	3.0	27
June	49	39	2.7	18
July	68	40	2.8	19
August	68	38	2.6	23
September	61	41	3.0	29
October	55	40	2.8	25
November	56	36	2.5	22
December	36	33	2.2	25

The last column gives the lowest recorded dew point in each month at 9 P.M. The eight days between July 18 and 25 were unusually dry, average dew point 26°, and my principal observations were made then. Other observations were secured in August, one in June and one in September. An examination of the table will show, also taking the diameter of Mars, clearness,[1] seeing, and availability of Moon into account, that my observations were made at the most favorable time of the opposition. There were nights in the summer months which could be, and were, selected for the work, such that the dew point fell as low as at any time in the opposition. I give the meteorological data for three such nights:

	Dry bulb	Wet bulb	Dew point	Vapor per cu. ft.
1894, July 19	65°.2	46°.4	25°.3	1.6 grains
" 20	68 .0	47 .3	25 .1	1.6
" 25	58 .5	41 .2	17 .5	1.2

The results for July 19 and 20, and all the monthly averages in the preceding table, are too great for this reason: the observations were made with a stationary psychrometer, but reduced by

[1] December was continuously cloudy.

means of tables made out for sling psychrometers. The psychrometer was well ventilated by wind on July 25.

Dr. Huggins' well-known 1867 observation was made on a day, February 14, when the mean daily dew point at Greenwich was 41°.1, corresponding to 3.0 grains of vapor in each cubic foot of air. Thus in February at Greenwich, at the low temperature 44°.0, there was twice as much vapor in the air as at Mt. Hamilton on the three dates in July at the temperature 64°, not to mention the lower stratum of 4000 feet which we escape.

Mr. Maunder observed the spectrum of Mars on three nights in 1877. The mean daily data for the three dates are:

	Dry bulb	Dew point	Vapor per cu. ft.
1877, Aug. 23	56°.8	45°.3	3.5 grains
Sept. 21	47 .2	41 .5	3.0
" 26	50 .9	46 .2	3.6

The air at the dates of Mr. Maunder's observations therefore contained 2.2 times as much vapor per cubic foot as our atmosphere for the three observations given above.

The meteorological data for Professor Vogel's observations are not at hand, but he has published the dry-bulb readings at noon, as well as the maximum and minimum, for each day. The mean of the noon and minimum readings will give an approximate value of the evening temperature. Assuming a relative humidity of 70 per cent., which is probably too low an estimate, we obtain:

	Dry bulb	Dew point	Vapor per cu. ft.
1873, April 2	52°	42°	3.1 grains
" 20	43	34	2.3
June 2	57	47	3.7
" 3	61	51	4.2

Thus the quantity of water vapor in the atmosphere at Bothkamp was about the same as at Greenwich in February, when Dr. Huggins observed, and in August and September, when Mr. Maunder observed.

Among the various favorable circumstances existing here for studying the spectrum of Mars I mentioned the altitude of the Observatory, but dismissed it with the comment that it "eliminates from the problem the absorptive effect of the lower 4200 feet of the Earth's atmosphere, with all its impurities." While I formed no estimate of the extent of that advantage, Mr. Jewell says it "is unquestionably an advantage, but it is much less than he [Mr. Campbell] thinks." He says that "during the warm, humid months the amount of water vapor in the air increases with the altitude to near the height of the lower clouds, and then begins to decrease." How does that apply to this problem? Evidently the instruments at sea level (where the early observations were made) indicate less moisture in the air than there really is; and our instruments, "at the height of the lower clouds," indicate more moisture than we really have. So much the worse for the early observations! But this meteorological question, at the best, can be answered in only a crude and uncertain manner. The curve of distribution of vapor varies widely, and is always uncertain. Mr. Jewell's curve may be satisfactory one week, and highly erroneous the next. If his curve is true for the warm, humid months of Baltimore, is it true for the mild, dry summer months at Mt. Hamilton? Sometimes for weeks there are no clouds above us, while the valleys below us may be filled with fog nearly every night. Without devoting more space to this uncertain subject, it seems probable that about 0.3 of the vapor in the air is below the 4000 feet level, and 0.7 above it.[1] To be on the safe side of this uncertain question, let us assume that 0.2 is below and 0.8 above the 4000 feet level. For purposes of comparison with observations made near sea level the 1.5 grains of vapor in our atmosphere on July 19, 20, 25, are equivalent to 1.2[2] grains per cubic foot. My decisive observations were made

[1] For the basis of this estimate see Dr. Hann's results from observations on mountain slopes and in balloons, in Hazen's *Meteorological Tables*, p. 53; and Langley's *Researches on Solar Heat*, pp. 182–184.

[2] This low result for the humidity at Mt. Hamilton on the three selected nights in July is in most striking contrast with the conditions prevailing at Baltimore, where the average humidity for the month of July is between seven and eight grains of vapor per cubic foot.

with Mars about 50° to 55° above the horizon, though some were made at greater and others at less altitudes. That is, I was looking through 1.3 thicknesses of the air stratum above us, or through 1.1 times the thickness of the stratum above sea level. It should also be said that most of the decisive early observations were made with Mars only from 21° to 26° above the horizon; so that the lower stratum of 4000 feet became equivalent to an equally dense and humid one 10,000 feet deep.

My paper on the spectrum of Mars scrupulously gave credit to the earlier observers,—Rutherfurd, Secchi, Janssen, Huggins, Vogel, Maunder,—by quoting the conclusions drawn by themselves from their latest observations. On the other hand I said "that some of the observations were made under circumstances extremely unfavorable, and that between the different sets of observations there was not that close agreement which one would like to see." Professor Vogel's recent paper criticises my observations very kindly, but rigorously. At the same time he refers to, includes, and accepts the results of the 1867–1877 observations, with the single criticism that his observations in 1873 and Mr. Maunder's in 1877 were made when Mars was in very unfavorable positions. I regret that he has not analyzed the old observations as rigorously as he has mine. If these observations, instead of being physical in their nature, were for the purpose of detecting variations of terrestrial latitudes, or for any kindred purpose, they would long ago have been analyzed and compared with the utmost rigor. Should we not be equally ready to discuss physical observations? Healthy growth certainly lies in that direction; and from a purely scientific and impersonal standpoint I desire to review the observations of Mars' spectrum.

The first observations appear to have been made by Rutherfurd[1] in 1862. Three nights' observations showed the solar lines *Hα*, D, E, *b*, *Hβ*, G, and another at about λ5330. Rutherfurd considered "that the D line is not present," but the strong line observed by him near the place of D was undoubtedly D.

Observations were made by Drs. Huggins and Miller on

[1] *Am. Jour.* January, 1863.

November 6, 1862 and April 17, 1863. "The principal solar lines were seen, and no other strong lines were noticed."[1]

Further observations were made in August, 1864, by Drs Huggins and Miller.[2] They detected no lines in the red, orange, yellow and green portions of the spectrum, other than those of the solar spectrum, except that "in the extreme red, probably about B and *a*, two or three strong lines were seen." Their observations in the blue and violet portions of the spectrum, and their interpretation of those observations, were withdrawn[3] as erroneous, by Dr. Huggins a few years later. Since the positions of the two or three lines seen in the extreme red were not determined, and since even B and *a* exist in the apparent solar spectrum, it is evident that the preceding observations by Rutherfurd, and by Huggins and Miller, have no positive bearing upon the question of Mars' atmosphere.

We have not the dates nor the details of Secchi's observations. They were probably made between 1865 and 1872. Professor Vogel is authority for the statement that Secchi's work did not go much further than Rutherfurd's.[4]

The first observations requiring serious consideration were made in 1867 by Dr. Huggins and by M. Janssen. Those by Dr. Huggins probably precede M. Janssen's.

Two points in Dr. Huggins' interesting paper[5] bear upon the question of that planet's atmosphere:

First, on one night, "February 14, faint lines were seen on both sides of Fraunhofer's D. The lines on the more refrangible side of D were stronger than the less refrangible lines. These lines occupy positions in the spectrum apparently coincident with groups of lines which make their appearance when the Sun's

[1] *Phil. Trans.* 1864, p. 423.

[2] *Ibid.*

[3] These observations and their withdrawal are described in a most puzzling manner in Scheiner's *Die Spectralanalyse der Gestirne* — see Frost's translation, p. 198, last paragraph. Why not change "more refrangible" to "less refrangible," and omit the last seven lines of the paragraph?

[4] *Untersuchungen über die Spectra der Planeten*, 1874, p. 21.

[5] *M. N.* 27, 179.

light traverses the lower strata of the atmosphere, and which are therefore supposed to be produced by the absorption of gases or vapors existing in our atmosphere. The lines in the spectrum of Mars probably indicate the existence of similar matter in the planet's atmosphere. . . . . That these lines were not produced by the portion of the Earth's atmosphere through which the light of Mars had passed was shown by the absence of similar lines in the spectrum of the Moon, which at the time of observation had a smaller altitude than Mars." These "lines" were observed on only one night, apparently, and it is uncertain as to exactly what part of the spectrum they belong. They probably refer to the wide band lying on both sides of D, between wave-lengths 5880 and 5905, though they may refer to the several bands lying between the wave-lengths 5880 and 5960. This observation was made with Mars in good position, and through only 2.5 times as much telluric aqueous vapor as my best observations.

The second point is this: "One strong line was satisfactorily determined by the micrometer to be situated from $H\alpha$, at one-fourth the distance from $H\alpha$ to B. As a similar line is not found in this position in the solar spectrum, the line in the spectrum of Mars may be accepted as an indication of absorption by the planet, and probably by the atmosphere which surrounds it." What is the significance of this strong line? Since there is no similar line in the spectrum of our atmosphere, it indicates that Mars' atmosphere is unlike ours. But are we to grant that this strong line exists? The observation has never been confirmed. I looked for the strong line on several favorable occasions, without success. On one night in 1877, Mr. Maunder, looking through twice as much telluric atmosphere and vapor as Dr. Huggins, saw a "very faint band" midway between $H\alpha$ and B. On one night in 1873 Professor Vogel observed a "very faint band" at about one-fourth the distance from $H\alpha$ to B; but he observed through as much telluric atmosphere and vapor as Mr. Maunder. Dr. and Mrs. Huggins make no mention of this strong line in their 1894 observations. I think there can be no

strong line in that position, unless it is variable between wide limits.

The dates and details of M. Janssen's work have never been published. A letter[1] written by him in 1867 states that he observed Mars' spectrum from a station on Mt. Etna, and at the observatories of Paris, Marseilles and Palermo. His conclusion was, "I believe I can announce to you the presence of aqueous vapor in the atmospheres of Mars and Saturn." Although M. Janssen has recently published[2] an interesting note on the question of water vapor in Mars' atmosphere, we still have no information concerning the dates and details of his observations. To what altitude did M. Janssen ascend? What was the altitude of Mars? Did he carry with him a telescope of sufficient size for this work? Was his spectroscope efficient? What bands were observed? Were the spectra of Mars and the Moon compared under identical circumstances? The observations cannot be discussed, because we have not the data. There was an undoubted and considerable advantage arising from the observer's altitude above sea level: he probably eliminated over one-fourth of our atmosphere, and half of the aqueous vapor. But were the other conditions favorable, or unfavorable?

The most extensive early observations were made at Bothkamp in 1873 by Professor Vogel. From his observations he considered that "it is definitely settled that Mars has an atmosphere whose composition does not differ appreciably from ours; and, especially, that atmosphere must be rich in aqueous vapor." He observed bands[3] indicating atmospheric absorption (oxygen) at λ 6279 (α) and λ 6877 (B), and bands indicating aqueous vapor absorption at λ 5700–5800 (δ), λ 5920, λ 5948, λ 6487 and λ 6555, which were stronger in Mars' spectrum than in the lunar and stellar spectra.

If we except the bands at λ 5700–5800 (δ) and at λ 6555, it must be admitted that Professor Vogel selected the best bands

[1] *C. R.* 64, 1304.

[2] In *Bull. Mens. de la Soc. Astronomique*, January, 1895.

[3] Reduced to Rowland's scale of wave-lengths.

in the spectrum for observation. If the results had been obtained under circumstances at all favorable, I would hesitate to question the conclusions reached by so able an observer. He has said that Mars was in a very unfavorable position. Even when the planet was on the observer's meridian its altitudes on the four dates were only 21°.3, 22°.2, 24°.5 and 24°.5. It is conceded by all that our own atmosphere and the vapor it contains constitute the great difficulty in the spectroscopic study of Mars' atmosphere. Now Professor Vogel observed through 2.3 times as much atmosphere and 6.4 times as much vapor as I did.

These observations, even under the best circumstances, are exceedingly delicate. If there is any difference of intensity of the critical bands in Mars' and the Moon's spectra it must be exceedingly slight. In comparing these spectra the observer ought to be able to turn immediately from Mars to the Moon, and *vice versa*, not only that he may remember the strength of the bands, but likewise the equally important strength of continuous spectrum. Professor Vogel does not tell us on what dates he observed the lunar spectrum; but he was unable on any of the dates to turn directly from Mars near the meridian to an equally high (low) Moon. He compared Mars' spectrum with stellar spectra. Were the stars all of strictly solar type? If not, the comparisons prove nothing. Many of the absorption bands in Mars' spectrum contain numerous strong lines of solar origin. Unless the absorption bands in the stellar spectra include the same strong solar lines, the planet's bands would necessarily appear the stronger.

Mr. Maunder observed the planet's spectrum at Greenwich on August 23, September 21 and 26, 1877. He detected the following bands:[1] λ 5640–5690 Brewster's δ; λ 5889–5903 group of lines round D; λ 6292 α; λ 6543–6579 group of lines round $H\alpha$; λ 6021 faint band; and very faint bands at λ 6512, λ 6696, λ 6874 (B?). The altitude of Mars when observed was only 25°. Therefore Mr. Maunder was observing through 2.4 times

[1] *M. N.* 38, 35. The wave-lengths are reduced to Rowland's scale, and the descriptions are Maunder's.

the vertical thickness of our atmosphere, or about 2.2 times as much as I did. There was about 2.8 times as much vapor above Greenwich as there was above Mt. Hamilton. Therefore the Greenwich observations were made through 6.1 times as much telluric aqueous vapor as mine were. The spectra of Mars and the Moon were compared on the first and third dates. Only two of the bands, the groups round *Hα* and D, were seen in the lunar spectrum. He writes "that round *Hα* was only ⅔ the breadth of the same group in Mars, and so much fainter that it was not seen until the pointer had been set to the proper reading for it, although, when once it had been found, it was easily recognized." It must be noticed that this lunar band, only 24 tenth-meters wide, observed with a single-prism spectroscope, in the red end of the spectrum, would be a narrow band occupying exactly the position of the very strong *Hα* line. Yet Mr. Maunder could not see it "until the pointer had been set to the proper reading for it." One would think the *Hα* line would make the best possible pointer. In fact, I found the *Hα* line a very prominent one, and on that account gave up trying to observe the very delicate vapor band in that region. Did Mr. Maunder see the *Hα* line in the lunar spectrum? It would seem not.

Again, Mr. Maunder observed that the lunar "D group was decidedly narrower than in Mars." This group (band) in the two spectra was compared on only one night, September 26. He assigned it the position λ 5888–5898 in the planet's spectrum. Now the very heavy D solar lines are at λ 5890 and λ 5896; and with the low dispersion used would cover the region λ 5888–5898. I do not see how the vapor band could be satisfactorily observed under those circumstances; and it would be still more difficult to see the "decidedly narrower" group in the lunar spectrum. The difficulty can hardly be explained on the basis of errors in determining the wave-lengths; the ever present D solar lines were perfect reference points.

It must also be noticed that the band observed at λ 5640–5690 does not occupy the position of any known telluric band Brewster's well-known band δ is at about λ 5680–5800.

Dr. and Mrs. Huggins, in 1894, repeated the half of Dr. Huggins' 1867 observations which relates to the bands in the vicinity of the D lines, arriving at the same result[1] as in 1867. They do not mention having looked for the "strong line" seen by Dr. Huggins in 1867 between $H\alpha$ and B. They strongly suspect that there is a band in the position λ5840–5860 which does not exist in the telluric spectrum.

Professor Vogel reobserved the spectrum on one night, November 15, 1894.[2] One atmospheric band, α, was observed. It was conspicuous in the spectrum of Mars, difficult to see in the lunar spectrum. Three aqueous vapor bands were observed — Brewster's δ and the bands at λ5920 and λ5945. Band δ was very distinct in the spectrum of Mars, weak in the lunar spectrum. The other vapor bands at λ5920 and λ5945 were equally distinct in both spectra. Further, a bright band somewhat more refrangible than D, due to contrast beween continuous spectrum and dark lines, appeared to be stronger in the planet's spectrum than in that of the Moon.

What weight must be given to these observations? I consider that the bands λ5920 and λ5945 are two of the very best bands to observe in order to detect aqueous vapor,[3] in our own atmosphere at least. Yet Professor Vogel describes them as *equally distinct in both spectra!* They therefore afford no evidence of aqueous vapor on Mars. It may be said by some that they do, because the planet was 43° above the horizon, whereas the Moon was only 25°; but until it has been determined, with the same apparatus, how much the conditions must change in order to produce appreciable change in the bands, there is no basis for the claim. The other vapor band observed, Brewster's δ, seems to me to be one of the poorest tests for aqueous vapor, at least so far as our own atmosphere is concerned, because of the supe-

[1] THE ASTROPHYSICAL JOURNAL, 1, 193–195.

[2] THE ASTROPHYSICAL JOURNAL, 1, 203–209. I regret to see that Professor Vogel and Dr. Huggins have both returned to the use of the old nomenclature for designating the hydrogen lines. Is the nomenclature recently suggested by Professor Vogel to be given up?

[3] See *Pub. A. S. P.* 6, 234.

rior strength of the purely solar lines lying within the limits of that band. If this band shows vapor on Mars, while the bands at λ 5920 and λ 5945 do not, then Mars' atmosphere must be unlike ours. Have these observations of the δ band been confirmed? Professor Vogel observed a band in 1873 in the position λ 5700–5800, and again in 1894, stronger in Mars' spectrum than in the Moon's. Mr. Maunder observed a band in Mars' spectrum at λ 5640–5690, which he called Brewster's δ, but there is no known telluric band at those wave-lengths. Dr. and Mrs. Huggins did not observe the δ band at all, but strongly suspect a band at λ 5840–5860, where there is no known telluric band. Mr. Campbell observed the δ band in both spectra to be of equal intensity, but was not sure the vapor lines exerted an appreciable influence when the bodies were more than 10° above the horizon. It would be difficult to find four results by four observers differing more widely than those do.

Professor Vogel agrees with me that it is very important, in comparing the spectra of Mars and the Moon, that the two spectra should have the same width and the same intensity. Practically, did he make his observations under those conditions? I think not. The critical bands all lie in the red, orange and yellow, but he employed a photographic telescope, corrected for the blue and violet. The planet's spectrum was not linear in the part under examination. It would have this form:

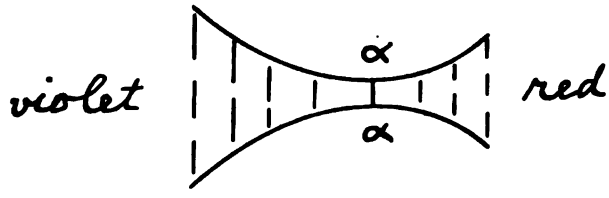

The less the dispersive power used, the steeper would be the apparent curve. Suppose the α rays were in focus: then only the α rays would enter the slit properly. The spectrum would have its full intensity at α, but would rapidly diminish in brightness as we go in either direction. It seems to me there could be only one result: the band under examination, at the brightest

point, would be intensified. If we shorten the slit so that the spectrum becomes linear, we do not remedy the matter; the intensities remain the same, and the band under examination is still at the brightest point in the spectrum. The Moon, being a large object, gives a linear spectrum, in which every part has its natural intensity, and the apparent intensities of the critical bands are not augmented. Why is it important that the two spectra be of the same brightness? To guard against physiological deception; an absorption band seen in a bright spectrum appears stronger than it would if seen in a fainter spectrum. Why is it important to give all parts of Mars' spectrum their natural intensities? To guard against physiological deception; an absorption band seen in the brightest portion of a spectrum appears stronger than if seen in the faint portions of the same spectrum. It may be possible to guard against physiological deception, but I think Professor Vogel's 1894 results, at least in part, can be explained by his having used a photographic telescope for comparing the dissimilar red ends of two spectra.

The spectrum of Mars was photographed by Dr. Huggins in 1879, by Dr. and Mrs. Huggins in 1894 and by Professor Vogel in 1894. The photographs extend from $H\beta$ far into the violet and ultra-violet. Comparisons with photographs of the solar spectrum were made by these observers. The planet's spectrum in this region showed *no* deviation *of any kind* from the solar spectrum. So far as I am informed, no attempt was made to compare, photographically, the region in which the important δ band is situated, though there are plates sensitive to the light from that region. It seems to me that we should make that the objective point of our next observations.

It is not my purpose to draw a conclusion from the observations reviewed above, other than this: many of them were made under circumstances extremely unfavorable, and between the different sets of observations there is not that close agreement which one would like to see.

MT. HAMILTON,
May 1, 1895.

PRELIMINARY TABLE OF SOLAR SPECTRUM WAVE-LENGTHS. VI.

By HENRY A. ROWLAND.

Wave-length	Substance	Intensity and Character	Wave-length	Substance	Intensity and Character
4674.648		000	4681.223		000
4674.829		0 N	4681.382		00
4674.933		0	4681.482		0000
4675.053		000	4681.646		1
4675.294	Ti	1 N	4681.781		0000 N
4675.453		000	4681.918		000 N
4675.569		00	4682.088	Ti	3
4675.785		0	4682.295	Fe?	1
4676.019		000	4682.529	Co	1
4676.188		00	4682.746	Fe?	0
4676.338		00	4682.940		000 N
4676.409		00	4683.134		000 Nd?
4676.531		00	4683.427		000 N
4676.713		00	4683.575		00 N
4676.829		000	4683.745 s	Fe	3
4677.096	Ti	00	4683.882		0000
4677.259		00	4684.001		0000
4677.415		000	4684.155		00
4677.604	Ti	00	4684.392		00 N
4677.775		0	4684.532		00 N
4677.897		000	4684.702		0000
4678.046		000	4684.774	Ce	0
4678.170		000	4684.924		000 N
4678.347 s	Cd	3 N	4685.058		000 N
4678.593		00	4685.208		0
4678.706		00	4685.452	Ca	2 N
4678.798		0000	4685.673		000 N
4679.027 s	Fe	6	4685.870		00 N
4679.249		000	4686.028		00 N
4679.409		2 N	4686.180		000
4679.594		000 N	4686.296		0000
4679.751		0000 N	4686.395 s	Ni	3
4679.995		0000	4686.544		000
4680.157		000	4686.804		00 N
4680.317	Zn	1	4686.924		00 N
4680.480		1	4687.114		00 Nd?
4680.658	Cr	1	4687.358		00
4680.745		0	4687.485		0
4680.926		00	4687.568	Fe?	2
4681.037	Cr	0	4687.712		0000

Wave-length	Substance	Intensity and Character	Wave-length	Substance	Intensity and Character
4687.850		00	4696.809		00
4687.981	Zr	0	4696.930		000
4688.117		000 N	4697.101		00
4688.357	Fe	2	4697.230	Cr	1
4688.554		0	4697.469		00
4688.651		000	4697.578		0
4688.862		0 N	4697.791		00
4689.236		00	4697.983		000
4689.388		000	4698.256		000 Nd?
4689.540	Cr	2	4698.451		00
4689.676	Fe?	1	4698.579	Co	0
4689.793		0000	4698.641	Cr	1
4689.935		00 N	4698.798	Cr	1
4690.149		000 N	4698.946	Ti	1
4690.317 s	Fe?	4	4699.127		00
4690.555		0	4699.309		000 N
4690.734		000	4699.511		4
4690.977	Ti	00	4699.762		00
4691.149		000 N	4699.899		00 N
4691.372		000	4700.029		000
4691.523 } s	Ti	1	4700.165		000
4691.602 }	Fe	5	4700.337		4
4691.777		1 N	4700.473	Fe?	000
4691.954		00 N	4700.614		00
4692.144		00 N	4700.795	Cr	0
4692.394		00 N	4700.989		0000 N
4692.699		00 N	4701.090		00 N
4692.829		0 N	4701.231	Fe?	1
4693.022		00 N	4701.345	Mn	00
4693.149		000 N	4701.535		1
4693.373	Co	0 N	4701.714	Ni	1
4693.513		000 N	4701.894		000
4693.852	Ti	0	4702.083		0 N
4693.964		000	4702.310		00
4694.125	Ni, Cr	1	4702.473		0
4694.298		0 N	4702.779		0
4694.478		000	4703.177 s	Mg	10
4694.632		00 N	4703.666		0000 N
4694.830		00 N d?	4703.768		00
4695.042	Fe?	1	4703.994 s	Ni	3
4695.078		00	4704.195		000
4695.331	Cr	0	4704.365		00 N d?
4695.625		0 N	4704.587		00
4695.782		00	4704.658		0
4695.926		00	4704.850		0000
4696.032		00	4704.962		0000
4696.203		00	4705.131	Fe	4
4696.444		00 N	4705.325		0000
4696.515		00	4705.425		000
4696.687		00	4705.641	Fe?	0

Wave-length	Substance	Intensity and Character	Wave-length	Substance	Intensity and Character
4706.099		00	4717.494		00
4706.278		00	4717.756		0
4706.484		00	4717.891		000
4706.730	Va	0	4718.065		00
4707.249		000	4718.601	Cr	3
4707.457	-Fe	5 d?	4718.766		000
4707.672		2	4719.012		000
4707.937		00	4719.407		00
4708.196	Cr	2	4719.690		0
4708.463		000 N	4719.862		000
4708.636		000 N d?	4720.035		000
4708.846		2	4720.318		00
4709.153	Ti	1	4720.571		0000
4709.271	Fe	3	4720.757		000
4709.507		000 N d?	4720.996		000
4709.680		000 N	4721.179	Fe?	2
4709.896	Mn	2	4721.310		000
4710.043		0000 N	4721.498		000
4710.252		000 N	4721.705		0000
4710.368	Ti	00	4721.927		0000
4710.471	Fe	3	4722.155		000
4710.737		000 N	4722.342 s	Zn	3
4711.197		000 N	4722.464		000
4711.665	Fe?	0	4722.646		0000
4711.804		000	4722.797	Ti	0
4712.260	Ni	0	4722.940		00
4712.433		00	4723.061		0000
4712.677		00	4723.179		000
4712.883		00	4723.294	Cr	00
4713.151		0000 N	4723.359	Ti	00
4713.361		00	4723.527		000
4713.697		0000 N	4723.628		0000
4713.989		00	4723.932		000
4714.248		0	4724.078		000
4714.381		00	4724.592		0
4714.548 } s		1	4724.718		000
4714.599 }	Ni	6	4725.033		000 N
4714.730		0000	4725.278		0000
4714.909		0000	4725.647		00
4715.089		000	4725.764		000
4715.280		0000	4726.133		00
4715.474	C?	00	4726.327	Fe?	0
4715.631		0000	4726.517		000
4715.783		000	4727.181		000
4715.946	Ni	4	4727.337	Cr	0
4716.076		000	4727.452		00
4716.319		0000 N	4727.582 } s	Fe	3
4716.686		000	4727.676 }	Mn	2
4717.015		00	4728.032		00
4717.306		0000	4728.132		00

Wave-length	Substance	Intensity and Character	Wave-length	Substance	Intensity and Character
4728.349		0	4739.140		0000
4728.595		0000	4739.291	Mn	3
4728.732	Fe	4	4739.473		0000
4728.966		0000	4739.635		00
4729.207	Fe?	1	4739.839		0000 N
4729.381		0000	4740.099		0000 N
4729.460		00	4740.349	Ni	00
4729.864	Fe? Cr	1	4740.530	Fe?	1
4730.042		0000	4740.668		0
4730.212		2	4741.131		1
4730.583		000	4741.260	Fe?	1
4730.897	Cr	1	4741.538		0000
4731.177		0	4741.718	Fe	3
4731.356	Ti	000	4741.979		0000
4731.466		0000	4742.125		0000
4731.651	Fe?	4	4742.307		000
4731.841		0000	4742.482		00
4731.984	Ni	1	4742.730		00
4732.228		000	4742.979	Ti	t
4732.353		000	4743.121		000
4732.501		000	4743.289		000
4732.640	Ni	1	4743.481		0000
4732.995		000	4743.674		0000
4733.126		0000	4744.008		000
4733.400		000	4744.301		0000 N
4733.604	Ti	00	4744.573	Fe?	3
4733.779	Fe	4	4744.826		000
4733.936		0000	4745.020		0000
4734.169		000	4745.131		000
4734.283	Fe?	1	4745.325		00
4734.361		0000	4745.500	Cr	00
4734.612		000	4745.890		0000
4734.763		00	4745.992	Fe	4
4734.847		0000	4746.144		0000
4735.019		000	4746.305		000
4735.181		0000	4746.457		00
4735.492		000	4747.469		0000
4735.625		000	4747.868		000
4735.843		000	4748.015		0000
4736.031	Fe	3	4748.167	Na?	000
4736.210		000	4748.325	Fe?	4
4736.411		0000	4748.552		0000
4736.677		000	4748.734		0000
4736.963	Fe	6	4748.922		000
4737.145		000	4749.443		0000 N
4737.297		0000 N	4749.849	Co	0 Nd?
4737.540	Cr	2	4750.139	Fe?	1
4737.817	Fe?	1	4751.279		0
4737.945		0000	4751.548		0000
4738.522		0000 N d?	4751.738		000

Wave-length	Substance	Intensity and Character	Wave-length	Substance	Intensity and Character
4752.012	Na?	00	4765.652		2
4752.125		0000	4765.851		0000
4752.289	Ni	2	4766.050	Mn	3
4752.471		0000	4766.621	Mn	4
4752.613	Ni	3	4766.827	Cr	000
4753.087		000	4766.966		00
4753.560		0000	4767.066		000
4754.225 s	Mn	7	4767.339	Fe?	0000
4754.549	Co	00	4767.471		0000
4754.949	Ni	1	4768.049	Cr	00
4755.342		00	4768.276	Co	000
4755.463		000	4768.519		3
4755.714		0000	4768.595	Fe	2
4755.889		00	4768.891		0
4756.019		000	4769.030		0000
4756.300	Cr	2	4769.222		0000
4756.552		000	4769.991	Ti	00 N
4756.705	Ni	3	4770.188		000
4756.913		0000	4770.881		000 Nd?
4757.213		0000	4771.279	Ti-Co	00
4757.509		000	4771.478		0000
4757.771	Fe	2	4771.664		3
4758.042		000 N d?	4771.903	Fe	2
4758.308	Ti	1	4772.086		0000
4758.615		000	4772.359		0000
4758.918		00	4772.511		000
4759.107		00 N	4772.814		0000
4759.463	Ti	2	4773.007	Fe	4
4759.716		0000	4773.209		0000
4759.858		0000	4773.333		000
4759.959		0000	4773.471		0000
4760.113		000	4773.605		00
4760.261		00	4773.715		0000
4760.405		0000	4773.900		0000
4760.935		000	4774.153		000
4761.294		00 N	4774.728		0000
4761.439		000 N	4775.330		000
4761.718	Mn	3	4775.690		0000 N
4761.899		0000	4776.072		000
4762.567	Mn	5	4776.259	Fe	00
4762.820	Ni	1	4776.546	Co	0 d?
4762.969		0	4776.678		000
4764.108	Ti-Ni	4 d	4777.370		0000
4764.282		0000	4777.780		000
4764.479	Cr	00	4777.916		000
4764.720		0	4778.441	Ti	00
4764.839		0000	4778.767		0000
4764.945		000	4779.634	Fe	1
4765.183		000	4780.169	Co	2
4765.314		0000	4780.640		0000

Wave-length	Substance	Intensity and Character	Wave-length	Substance	Intensity and Character
4781.007		000	4796.852		0000 N
4781.201		0000	4797.090	V	000
4781.639		000 N d?	4797.230		000
4781.913		00	4797.352		000
4782.256		000	4797.544		0000
4782.467		0000	4797.813		0000
4782.998		000	4797.908		0000
4783.169		00	4798.169		0000
4783.613 s	Mn	6	4798.293	Ti	000
4784.048		000	4798.453	Fe	1
4784.189		0	4798.724		1
4784.898		0000	4798.921		0
4785.256		0000	4799.255		0000
4785.872		000	4799.437		0000
4786.145	Fe?	0	4799.598	Fe	1
4786.309		0000	4799.771		0000
4786.472	Ni	0	4799.984	Ti	1
4786.727	Ni	3	4800.080	Cd	00
4787.003	Fe	2	4800.322		000
4787.289		0000	4800.505		0000
4787.694		0000	4800.728		0000
4788.018	Fe?	1	4800.842	Ni-Fe	2
4788.403		0000	4801.027		0000
4788.952	Fe	3	4801.213	Cr	1
4789.122		0000	4801.421		0000Nd?
4789.324		000	4801.806		000
4789.528	Cr	2	4802.100		0000
4789.638		0000	4802.709		00
4789.849	Fe	3	4802.879		0000
4790.522	Cr	00	4803.072	Fe	2
4790.755		000	4803.233		0000
4790.937		000	4803.871		0000
4791.157		00	4804.232		000
4791.329		0	4804.706	Co?	0
4791.439	Fe?	1	4804.833		000
4791.787		0000	4805.035		0000
4792.393		0000	4805.191 } s		0
4792.500		00	4805.285 }		3
4792.702	Ti-Cr	2	4805.476		0000
4793.045	Co	1	4805.606	Ti	0
4793.635		0000	4806.437		000
4793.927		0000	4806.523		000
4794.165		000	4806.801		0000
4794.549		00	4806.984		0000
4794.850		0000	4807.179	Ni	2
4795.024		0000	4807.411		000
4796.041		000	4807.725	Cr	000
4796.228		0000	4807.900	Fe	1
4796.373	Cr-Ti	00	4808.340		0
4796.551		0000	4808.733	Ti	00

Wave-length	Substance	Intensity and Character	Wave-length	Substance	Intensity and Character
4808.868	Fe	0	4821.667		000
4809.062		00	4821.788		0000
4809.332		00	4822.521		000
4809.455		000	4822.752		000
4809.661		0000	4822.857		000
4809.803		0000	4823.003		0000
4810.124		00	4823.145		0000
4810.724 s	Zn	3	4823.267		0000
4810.922		000	4823.489		000
4811.235	Ti	00	4823.697 s	Mn	5
4811.542		000	4824.077		000 N
4812.179	Ni	00	4824.325 s	Fe	3
4812.427	Ti	0000	4824.502		0000
4812.538		0	4824.613		000
4813.081		000	4824.775		0000
4813.187		0000	4825.018		0000
4813.300		0	4825.145		000
4813.447		0000	4825.530		00
4813.661	Co	1	4825.666	Ti	000
4813.908		0000 N	4825.787		0000
4814.166		000 N	4825.907		000
4814.451		000	4826.554		0000
4814.559		000	4827.029		000 N
4814.776		00	4827.458		0000
4815.057		0000	4827.637	V	000
4815.239		0000	4827.804	Ti	00
4815.412		000	4828.513		0000 N
4815.492		0000	4828.899		0000
4815.674		0000	4829.042		0000
4815.820		0000	4829.214	Ni	3
4816.013		0000	4829.351		0000
4816.119		00	4829.492		0000
4816.319		000	4829.551	Cr	2
4816.606		0000 d?	4829.878		0000
4816.865		0000	4830.486		0000
4817.148		0000	4830.707		0000
4817.559		0000 N	4831.365	Ni	3
4817.820		0000	4831.578		000
4817.988	Ni? Fe?	2	4831.831	V	00
4818.217		000	4832.099		0000
4818.428		0000	4832.233		0000
4818.569		0000	4832.460		0000
4818.843		0000 N	4832.615	V	00
4819.205		0000	4832.731		0000
4819.369		0000	4832.905	Fe	3
4819.525		0000	4833.075		0000
4819.830		0000	4833.378		000
4820.593	Ti	1	4833.559		0000
4821.189		000	4833.761		0000
4821.309		0	4834.019		000

Wave-length	Substance	Intensity and Character	Wave-length	Substance	Intensity and Character
4834.164		0000	4843.880		0000
4834.356		0000	4844.032		0000
4834.538		0000	4844.210	Fe	1
4834.695	Fe	1	4844.408	Mn	0000
4834.796		000	4844.498		000
4834.998		000	4844.688		00
4835.276		0000	4844.887		0000
4835.471		000	4845.061		000
4835.729		0000	4845.363		000
4835.888		0000	4845.533		000
4836.059	Fe	2	4845.692		0000
4836.187		0000	4845.843	Fe	1
4836.313	Ti	0000	4845.991		000
4836.423		0	4846.187		0000 N
4836.649		0000	4846.342		0000 N
4836.858		0000	4846.571		000 N d
4837.044	Cr	00	4846 898		0000
4837.230		0000	4847.375		0000
4837.382		0000	4847.497	Ca	0
4837.584		0000	4847.634		0000
4837.850		0000	4847.809		0000
4838.009		0000	4847.924		000
4838.130		0000	4848.110		0000
4838.277		00	4848.273		000
4838.404		0000	4848.438		2
4838.526		0000	4848.605	Ti	0000
4838.699		2	4848.656		000
4838.837[1]	Fe, Ni	1	4848.836		0000
4839.012		0000	4849.078	Fe	1
4839.305		0000 N	4849.261		0000
4839.548		0000	4849.357		0
4839.734	Fe	3	4849.526		0000
4839.973		0000	4849.738		0000
4840.075		000	4849.845	Cr	00
4840.193		0000	4850.063		0000
4840.449	Co	2	4850.386		000
4840.501	Fe	3	4850.934		0000
4841.074	Ti	3	4851.126		000
4841.683		0000	4851.321		0000
4841.859		0000	4851.508		0000
4842.977		0	4851.689	Ca, V	1
4842.159		000	4851.864		0000 N
4842.395		0000	4852.055		000
4842.774		0000	4852.208		00
4842.918		0000	4852.743		2
4842.980	Fe	1	4852.927		0000 N
4843.123		000	4853.221		0000 N
4843.336	Fe	3	4853.467		000
4843.554		000	4853.726		0000
4843.690		00	4853.960		00

[1] Is this Si?

Wave-length	Substance	Intensity and Character	Wave-length	Substance	Intensity and Character
4854.060		0000	4866.465	Ni	2
4854.346		000	4866.930		0000
4854.535		0000	4867.071		0000
4854.809		000	4867.724		00
4855.059	Fe	1	4867.822		0000
4855.348		000	4868.056	Co	1
4855.416		0000	4868.296		0000
4855.600	Ni	3	4868.451	Ti	0
4855.740		0000	4868.599		00 d ?
4855.859	Fe	2	4868.991		0000
4856.084		0000	4869.119		0000
4856.203	Ti	1	4869.330		0000
4856.380		00	4869.652	Fe?	0
4856.580		0000	4870.230		00
4857.082		000	4870.323	Ti	1
4857.280		000	4870.603		000 N
4857.579	Ni	1	4870.829		0000 N
4857.744		0000	4870.996	Ni, Cr	3
4857.967		000 N	4871.232		000
4858.323		0000	4871.404		0000
4858.443		000	4871.512	Fe	5
4858.508		0000	4871.867		0000 N
4858.675		0000	4872.112		1
4858.968		0000	4872.332	Fe	4
4859.221		000	4872.692		0000 N
4859.316	Fe?	0	4872.885		0000
4859.485		0000	4873.092		000
4859.667		0000	4873.276		0000
4859.928 s	Fe	4	4873.440		0
4860.203		0000	4873.630	Ni	2
4860.401		00	4873.792		0000
4861.173		0	4873.935		00
4861.527 s F	H	[1] 30	4874.055		0000
4862.029	Cr	0	4874.196		0
4862.134		00	4874.379		0000
4862.368		000	4874.544		0
4862.550		0000	4874.693		0000
4862.732		000	4874.834		000
4862.783		0	4874.976	Ni	0
4863.277		000	4875.277		0000
4863.431		0000	4875.215		0
4863.649		000	4875.381		0000
4863.833	Fe	2	4875.522		0000
4863.961		0000	4875.671	V	1
4864.160		0	4875.921		0000
4864.362		0000	4876.060	Fe	2
4864.505		1	4876.275		0000
4864.726		0000	4876.384		000
4864.919	V	0	4876.586		1
4865.798		1	4876.666		00

[1] Width of F is 0.750.

Wave-length	Substance	Intensity and Character	Wave-length	Substance	Intensity and Character
4876.855		000	4888.822	Fe	2
4877.772		0	4889.011		0000
4878.033		000 N	4889.187	Fe?	3
4878.313	Ca	3	4889.294	Fe	2
4878.407	Fe	4	4889.830		0000
4878.690		0000	4890.397		0000
4878.902		000	4890.620		0000
4879.331		000	4890.948 s	Fe	6
4879.701		0000	4891.223		000
4879.883		0000	4891.332	Co	000
4880.225		000	4891.683	Fe	8
4880.501		0000	4892.047		000
4880.715		000	4892.138		0000
4881.128	Ti	000	4893.030	Fe	1
4881.448		0000	4893.228		000
4881.739	V	1 N	4893.434		0000
4881.904	Fe	2	4893.606		000
4882.129		0000	4893.751		0000
4882.336	Fe	3	4893.886		000
4882.518	Ti	000	4893.997		00
4882.670		000	4894.141		0000
4882.891		000	4894.551		000 N
4883.091		0000 N	4894.743		00
4883.313		0000 N	4894.977		0000
4883.651		000 N	4895.214		0000
4883.867	Yt earth	2	4895.841		000 N
4884.084		000	4896.625	Fe	1
4884.242	Mn	000	4896.763		000
4884.779		0	4897.379		0000
4884.984		000	4897.652		000
4885.124		000	4898.652		0000
4885.264	Ti	2	4898.798		0000
4885.418		0000	4899.702		000 Nd?
4885.620	Fe	3	4899.917		0000
4885.802		0000	4900.095 s	Ti La	2
4885.955	Cr	0	4900.301 s	Y?	2
4886.132	Cr	00	4900.455		0000
4886.268		0000	4900.648		0000
4886.359		0000	4900.808		000
4886.522	Fe	3	4901.002		00
4886.757		0000	4901.152	Ti	0
4886.899		000	4901.498		0000 N
4887.027		0000	4901.793		000 N
4887.187	Ni, Cr	2	4902.028		000 N
4887.381	Fe?	2	4902.257		0000
4887.549		00	4902.416		000
4887.715		0000	4902.562		000
4887.879		000	4903.278		0000
4888.344		000	4903.440 } s	Cr	0
4888.706	Cr	00	4903.502 }	Fe	5

ON THE ELECTROMAGNETIC NATURE OF THE SOLAR RADIATION AND ON A NEW DETERMINATION OF THE TEMPERATURE OF THE SUN.

By H. EBERT.

A NEW method of determining the temperature of those regions in the Sun which emit the continuous spectrum has become possible, since the investigations of Langley and Rubens have revealed the existence of a definite relation between the wave-length of the maximum point of the energy curve and the absolute temperature of the radiating body. Langley, by means of a rock-salt prism, investigated the distribution of energy in the spectrum of a body which was coated with lampblack and heated to a definite temperature, and found that the minimum deviation of the maximum ordinate of the curve increased with the temperature. To the investigations of Rubens we are indebted for an exact knowledge of the dispersion of rock-salt far down into the infra-red. With the aid of the data supplied by Langley's researches, Rubens succeeded in deducing the law that the wave-length λ of the maximum energy is inversely proportional to the square root of the absolute temperature T of the radiating body. From observations of the radiation of blackened bodies between absolute temperatures varying from 373° to 1088°, he found the relation:[1]

$$\lambda\sqrt{T} = 123,$$

λ being expressed in microns ($\mu = 0.001$ millimeter).

In the continuous background of the solar spectrum the maximum energy is in the orange, or, more definitely, according to the careful measurements of Langley, very nearly at 0.6μ. There remains only the question, whether we can regard the incandescent particles in the Sun, which yield the continuous spectrum, as comparable to a black body with respect to their total radiating capacity.

[1] *Wied. Ann.* 53, 284, 1894.

The early discussions of this subject by Zöllner, and the experiments of Wüllner on the spectra of compressed gases, showed that in the case of the Sun, even if a gaseous constitution were assumed, and no matter what solar theory were adopted, the emission would extend over a great range of wave-lengths, in consequence of the high pressure which must be regarded as existing there. This conclusion has been verified by later investigations, although views as to the nature of radiation have undergone considerable change. A comparison of the form of the solar energy curve with that of a strongly damped electric oscillator shows that in sunlight we are dealing with electromagnetic vibrations, originating principally in small electric oscillators, the fundamental period of which is that of the red hydrogen line $H\alpha$ (Garbasso). It has been shown by F. Richarz, and later by Ebert, that the electric valence charges of the atoms, which with Faraday we must suppose to exist in order to account for the phenomena of electrolysis, afford by their vibrations a satisfactory explanation of radiation by a self-luminous body. The fact that hydrogen is one of the most important constituents of the Sun points, from an entirely new direction and in harmony with all other teachings of solar physics, to the same conclusion. According to the curve of emission, however, the electrical oscillations of the valence charges of this gas extend over a great range of wave-lengths; this fact is indicative of strong damping, and hence, according to the interference experiments of Ebert, of frequent collisions between similar molecules, *i. e.*, great density. The hydrogen to which the continuous background of the solar spectrum is mainly due must therefore be in a strongly compressed state, and this consequence also is in accord with all solar theories. The above-mentioned state of the electrically charged hydrogen atoms which mainly determine the solar radiation, and which, for the most part, must therefore execute forced vibrations, imposes the condition that incident electromagnetic vibrations of very different wave-lengths must be reinforced, and that their energy must be changed into other forms, and especially into heat (experiments of P. Lebedew on electromagnetic

radiation). The last result may be expressed thus: Rays of very different periods, such as are emitted by the oscillators which are essentially the source of solar radiation, are also absorbed by them. With respect to electromagnetic radiation, the principal mass of the Sun acts like a black body. As we find in a solar spectrum a great range of emitted wave-lengths, we may also conclude that for these wave-lengths the radiating body exercises a very complete absorption.

We might have arrived at the same result by the application of Kirchhoff's law, according to which there must be a corresponding absorption where there is emission. But it is very doubtful whether the law can be applied to the Sun, or to self-luminous heavenly bodies in general, since in this case we are hardly dealing with the "normal" distribution of energy among translatory, rotary and oscillatory motions, for which alone, as E. Wiedemann has proved, the law is valid. The luminous action taking place on the Sun is, like that in a Geissler tube, rather to be counted among the phenomena of "luminescence," in which the excitement of the atomic charges and therefore the radiation are far more intense than those which would correspond to translatory motion (*i. e.*, temperature) under normal conditions.

If then we take our stand upon the ground that these views as to the electromagnetic nature of the solar radiation are correct, we see, as before, that the application of Rubens' formula to the parts of the Sun that give the continuous spectrum is unexceptionable, and in accordance with all recent investigations on electromagnetic radiation. Substituting Langley's value $\lambda = 0.6\mu$, the resulting temperature in round numbers is 40,000° Centigrade.

The parts of the Sun to which this value applies belong to the more interior regions; they are at any rate deep under the "reversing layer" and therefore probably below the photosphere. For these parts the temperature determined above is to be regarded as a very plausible one, and it is in good agreement with values previously determined by totally different methods.

K. UNIVERSITAET,
Kiel.

PHOTOGRAPHS OF THE MILKY WAY NEAR 15 MONOCEROS AND NEAR ε CYGNI.

By E. E. BARNARD.

I SEND two more photographs for reproduction in THE ASTROPHYSICAL JOURNAL (see AP. J. No. 1).

These were also made with the Willard six-inch portrait lens.

THE REGION NEAR 15 MONOCEROS.

The picture near 15 Monoceros shows that star to be not only nebulous (and this is questioned in the nebula catalogues) but it shows that a vast diffused nebulosity extends for several degrees in all directions from 15 Monoceros. It extends northward for 2° or 3° to the edge of the great vacancy shown among the stars in the northern part of the picture. On the original negative this nebulosity does not condense at 15 Monoceros or any of the bright stars, but there is a strong condensation some 10′–15′ south preceding 15 Monoceros. Some 2° or 3° to the west of this will be seen an irregular elliptical nebulosity that involves several considerable stars.

This nebula was found by me in 1888 with the twelve-inch. The photograph shows several peculiar, sharply defined black holes or perforations in the north part of it. The telescopic view gives one no idea of the form of this object, and nothing can be seen of the dark holes in it. Indeed, the entire object is extremely difficult in any telescope. Its position for 1860.0 is R. A. $6^h\ 23^m\ 27^s$; Dec. N. 10° 7′.

In the southern part of this picture is shown a mixture of stars and nebulosity, an enlarged photograph of which was printed in *Astronomy and Astro-Physics*, No. 138. The nebula was discovered by Swift, about 1857, but was not recognized as a new nebula until 1883, when I independently found it. This object is N. G. C. 2237 and its position for 1860.0 is R. A. $6^h\ 23^m\ 29^s$; Dec. N. 5° 2′.5.

PLATE III

N

E

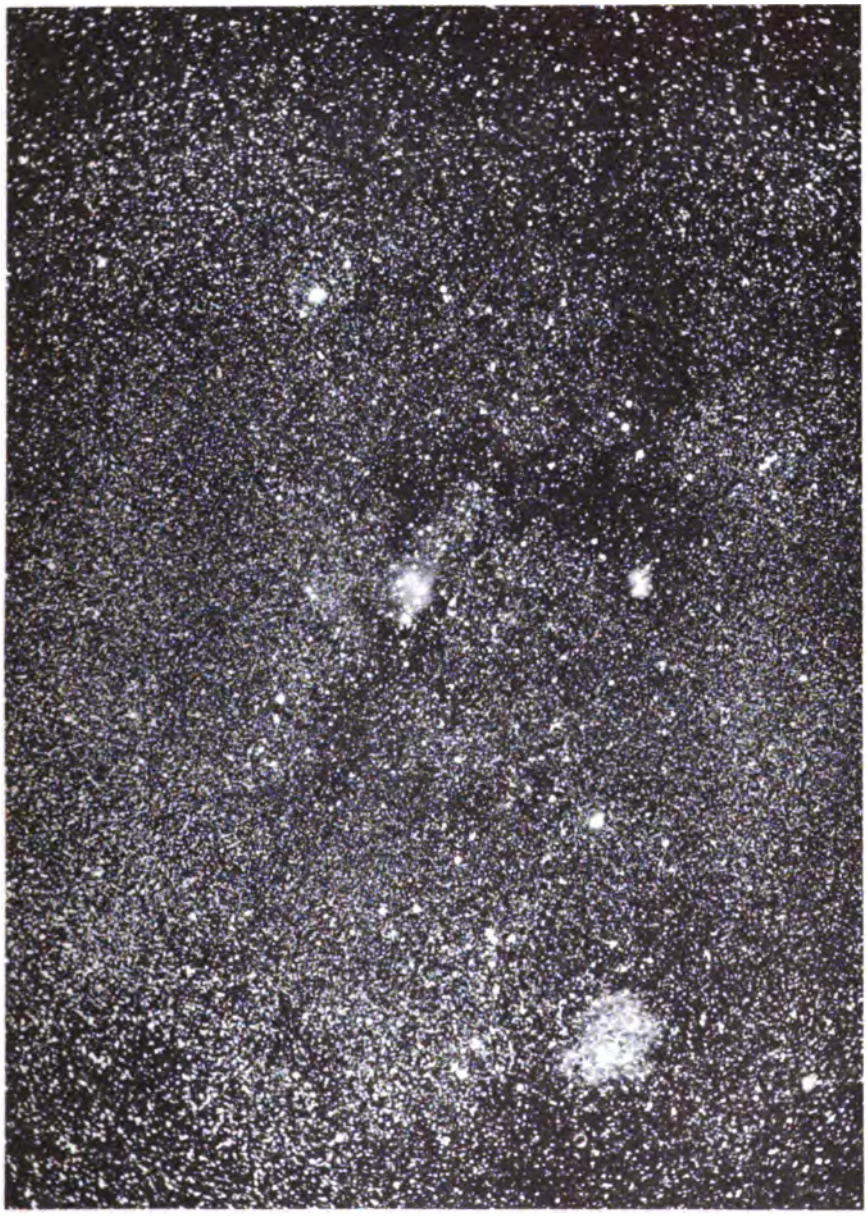

W

S

PHOTOGRAPH OF THE MILKY WAY NEAR 15 MONOCEROS

By E. E. BARNARD, Lick Observatory

Exposure 3h 0m | Feb. 1, 1894 | Six-inch Portrait Lens

PLATE IV

N

E W

S

PHOTOGRAPH OF THE MILKY WAY NEAR ε CYGNI

By E. E. BARNARD, Lick Observatory

Exposure 5h 20m Sept. 25, 1894 Six-inch Portrait Lens

THE REGION OF ϵ CYGNI.

This photograph shows the Milky Way about the star ϵ Cygni. South of ϵ Cygni will be seen two or three very singular, long nebulous strips. One of these passes through the star κ Cygni. This is N. G. C. 6960, and its position for 1860.0 is R. A. 20^h 39^m 53^s; Dec. N. 30° 12′.8. It is extremely narrow and runs north and south for over a degree. It will be seen that this nebula is very sharply pointed at its north end and at its south end becomes somewhat broader and shredded. The picture shows that it passes close following κ Cygni, and that its apparent connection with that star is probably a case of accidental projection.

Following this is the knotted and curved nebula N. G. C. 6995 whose place for 1860.0 is R. A. 20^h 51^m 20^s; Dec. N. 30° 40′.7. It will be seen that this remarkable nebula is made up of a curve of nebulous clouds. This is an easy object in a telescope and the cloud-masses are striking to the eye.

Between these two nebulæ, and a little north, is a fainter and irregular mass of nebulosity. The bright star in the middle of the picture is ϵ Cygni.

MT. HAMILTON, May 22, 1895.

ON THE LIMIT OF VISIBILITY OF FINE LINES IN A TELESCOPE.

By ALBERT A. MICHELSON.

IT is well known that the *limit of resolution* of a telescope is given by the expression

$$\epsilon_o = \frac{\lambda}{a},$$

in which λ is the wave-length of the light employed and a, the diameter of the object-glass. The expression may be translated to mean that it would be difficult to perceive as separate objects two points or lines whose distance subtends an angle less than ϵ_o.

But it does not at all follow that lines or other objects of smaller apparent magnitude than this would be invisible. This would depend, however, on the brightness a of the object as compared with that of the background b upon which it is projected. The expression for the intensity of the image of a line of angular width $d\xi$ in a telescope provided with a rectangular aperture is

$$dI = a \frac{\sin^2 \kappa (x - \xi)}{\kappa^2 (x - \xi)^2} d\xi,$$

in which $\kappa = \frac{\pi}{\epsilon_o}$ and x is the angular distance from the axis.[1]

The intensity due to a band of breadth ϵ, and of constant brightness a, that of the rest of the field being b, would be

$$I = 2b \int_0^\infty \frac{\sin^2 \kappa (x - \xi)}{\kappa^2 (x - \xi)^2} d\xi - 2(b - a) \int_0^{\frac{1}{2}\epsilon} \frac{\sin^2 \kappa (x - \xi)}{\kappa^2 (x - \xi)^2} d\xi.$$

[1] See Lord Rayleigh's article, "Wave Theory," *Ency. Brit.* The expression for a circular aperture is there worked out, but the results differ so slightly from those here given that for the present purpose the simpler expression will answer.

The first integral is $\frac{\pi}{2\kappa}$. The second may be replaced by

$$\frac{1}{2} e \frac{\sin^2 \kappa x}{\kappa^2 x^2},$$

since the limiting values of ξ are very small. We have, therefore,

$$I = \frac{\pi}{\kappa} b - (b - a)\, e \frac{\sin^2 \kappa x}{\kappa^2 x^2}.$$

On the axis $I_e = \frac{\pi}{\kappa} b - (b - a)\, e$, while at a sufficient distance

$$I_1 = \frac{\pi}{\kappa} b.$$

Accordingly we have

$$\frac{I_1 - I_e}{I_1} = \frac{b - a}{b} \cdot \frac{e}{e_e}.$$

$$\text{If } r = \frac{I_1 - I_e}{I_1} \quad \text{and } \rho = \frac{b - a}{b}$$

$$\frac{r}{\rho} = \frac{e}{e_e}.$$

That is, the ratio of the percentage excess of brightness of image to that of object is equal to the ratio of angular magnitude of the object to the limit of resolution of the telescope.

To find the limit of visibility in the case of a fine wire stretched against a bright background, let $r = .02$ be the limit of percentage difference in brightness readily perceptible to the eye. For this value, and on the supposition that no light reaches the eye from the wire itself, we have

$$e = .02\, e_e,$$

from which it appears that a line subtending an angle only one-fiftieth of the limit of resolution may still be distinctly seen.

To test the value of this deduction, a platinum wire $0^{cm}.01$ diameter was stretched across a window-frame, the background being a nearly uniform gray sky.

This was observed through various apertures and at such distances that the wire was just visible. The following is a table of results:

Width of Aperture	Form	Limiting Distance	$\frac{\epsilon}{\epsilon_0}$
cm		cm	
0.12	circle	550	.033
0.16	circle	1100	.022
0.08	slit	460	.035
0.15	slit	1000	.030
0.10	circle	1400	.012
			Mean = .026

The last result was obtained under better conditions than the others, in consequence of the distance being fixed while a series of circular apertures of gradually diminishing size were placed in quick succession in front of the eye. The naked-eye experiments proved somewhat better than those made with a telescope, on account of the greater uniformity of the field.

It appears, therefore, that the theoretical result is amply confirmed by experiment.[1]

An interesting application of these results is suggested in the problem of the "canals" of Mars. I am not aware that these markings have been satisfactorily observed with an objective of less than eighteen inches aperture. If this be taken as the limiting aperture, the above formula would give $\epsilon = 2 \times 10^{-6}$ as the smallest angular width which could be distinctly observed. Taking the distance of Mars under favorable conditions at fifty million miles, this would correspond to an actual width of the canals of about one mile.

This supposes, however, that the canals are quite dark. Otherwise this result would have to be multiplied by the ratio

$$\frac{a}{b - a}.$$

[1] Evidently the case of a bright line upon a dark background is also covered by the formula, and since in this case there is practically no limit to the value of ρ, the ratio $\frac{\epsilon}{\epsilon_0}$ may be very small indeed, as is indeed at once evident in the case of the fixed stars, or that of a spider-web reflecting sunlight.

CONDITIONS AFFECTING THE FORM OF LINES IN THE SPECTRUM OF SATURN.

By JAMES E. KEELER.

IN a previous article[1] I described a spectroscopic proof of the meteoric constitution of Saturn's rings, and determined the form of the equations to the spectral lines when the slit of a spectroscope is made to coincide with the major axis of the ring on the slit plate. A number of photographs which I have recently obtained under different conditions show that it is desirable to consider a somewhat more general case than that above mentioned, so that the effect of instrumental displacements can be ascertained. It is obviously impossible to keep the image perfectly motionless on the slit plate during the long exposure which is made necessary by the faintness of the object and the high dispersion of the spectroscope, and errors in guiding affect the characteristic forms of the lines.

It is not however necessary to consider the most general case of the slit in any position angle. The slit can be placed quite accurately parallel to the major axis of the ring, either by direct observation with a diagonal eyepiece, such as is now used on nearly all elaborate astronomical spectroscopes, or by setting the position circle of the instrument with the aid of an ephemeris, while the effect of any slight departure from this position is easily seen to be very small. It will be sufficient to consider the case where the slit is parallel to the major axis of the ring, but not necessarily coincident with it. The effect of any displacement across the line of the slit can then be determined from the equations to the spectral lines, while the effect of drift along the slit, being merely to shift the whole spectrum in the direction of its breadth, can be seen at once when the former effect is known.

As in the special case first considered, the collimator and

[1] See this JOURNAL, 1, 416.

camera are supposed to have the same focal length, so that the point x, y of the spectral line corresponds to the point x of the slit. The symbols below have very nearly the same meaning as in my former article.

Let x, y be the coördinates of a point on the displaced line, referred to the same axes as before,

v = velocity in the line of sight of point on Saturn corresponding to x,

a = Saturnian longitude of the same point, reckoned from the central meridian,

γ = Saturnian latitude of the same point,

V' = velocity of a point on the equator of Saturn,

2ρ = diameter of the image of the ball on the slit plate,

β = elevation of Earth above the plane of the ring.

To determine the form of a line in the spectrum of the planet we have

$$x = \rho \sin a \cos \gamma,$$
$$y = av = aV' \sin a \cos \beta \cos \gamma,$$
$$\frac{y}{x} = \frac{aV'}{\rho} \cos \beta = \text{constant}.$$

The inclination of the line, being independent of γ, is therefore the same for all parts of the disk. If the image is displaced in declination[1] the only effect will be to give a disproportionate exposure to the middle parts of the lines, as the spectrum will not then be wide enough to reach their ends. The effect of drift in right ascension[1] will be to broaden the lines equally throughout their length. This peculiarity of the spectrum of a rotating sphere has been pointed out by Deslandres.[2]

To determine the form of a line in the spectrum of the ring, regarded as a swarm of particles moving in circular orbits, the following additional symbols are required:

Let n = ratio of size of object to size of image on the slit plate,

nR = radius of the orbit of a particle corresponding to the point x,

[1] For convenience I use motion in right ascension and declination to signify respectively motion in the direction of the slit and at right angles to it.

[2] *C. R.* 120, 417.

V = orbital velocity of the same particle,

q = distance of the slit from the major axis of the image of the ring,

p = projection of this distance on the plane of the ring, so that $q = p \sin \beta$.

Then the motion of x in the line of sight is

$$v = V \sin \alpha \cos \beta,$$

and by Kepler's third law,

$$V = \frac{k'}{R^{\frac{1}{2}}};$$

hence

$$v = \frac{k'}{R^{\frac{1}{2}}} \sin \alpha \cos \beta.$$

By the geometrical relations of the quantities,

$$R = (p^2 + x^2)^{\frac{1}{2}}; \quad \sin \alpha = \frac{x}{(p^2 + x^2)^{\frac{1}{2}}}.$$

Substituting these values,

$$y = av = \frac{ak' x \cos \beta}{(p^2 + x^2)^{\frac{3}{4}}},$$

and placing the product of the constant terms equal to k, we have, for the equation to a spectral line,

$$y = \frac{kx}{(p^2 + x^2)^{\frac{3}{4}}}.$$

This reduces to the form $y = kx^{-\frac{1}{2}}$ for the special case considered in my former article, when $p = 0$.

The general equation to the family of curves obtained by giving different values to p is

$$\frac{y}{x} - \frac{dy}{dx} - \frac{3y^{\frac{5}{3}}}{2k^{\frac{2}{3}} x^{\frac{1}{3}}} = 0.$$

In what follows I have considered only such properties of these curves as have a physical bearing on the present subject. The direction of a spectral line at any point is given by

$$\frac{dy}{dx} = \frac{k\left(p^2 - \frac{x^2}{2}\right)}{(p^2 + x^2)^{\frac{3}{4}}}.$$

At the origin, $\tan \phi = kp^{-\frac{1}{2}}$.

The maximum ordinate of the curve, at $x = p\sqrt{2}$, is

$$\frac{2^{\frac{1}{2}}k}{3^{\frac{3}{2}}p^{\frac{1}{2}}} = 0.620kp^{-\frac{1}{2}}.$$

The variation of the inclination of a line produced by a displacement dq of the slit is

$$\frac{d}{dp}\left(\frac{dy}{dx}\right)\left(\frac{dp}{dq}\right) = \frac{3kp(5x^2 - 2p^2)}{4(p^2 + x^2)^{\frac{5}{2}} \sin\beta}.$$

It is small when p is small and x large, but when x is small the change may be very great. The latter case cannot, of course, occur in practice. The ring is limited in breadth, while the equations refer to particles in a plane extending indefinitely outward from a point in which the entire mass of the planet is concentrated.

By means of these equations I have traced the curves shown in Fig. 1, by which the effect of a change in the declination of the slit, or in its width, is more readily seen than by the formulæ. The six curves shown correspond to values of p respectively equal to 0, $\frac{1}{20}$, $\frac{1}{10}$, $\frac{1}{4}$, $\frac{1}{2}$ and $\frac{7}{10}$ of the radius of the outer ring, or to values of q equal to the same fractions of the semi-axis minor of the apparent ellipse.[1] The unbroken parts of the curves correspond to actual points in the system. It will be seen that scarcely any effect on the position or direction of a line in the spectrum of the ansa is produced by a displacement in declination not exceeding one-fourth the semi-axis minor, and a displacement greater than this would mean very poor guiding. At half the semi-axis minor the effect on the line is very considerable, but at this point the spectrum of the ring begins to encroach on that of the planet, and the two spectra would not be sharply separated on the photograph. The separation of the photographed spectra is in fact a good test of the guiding during the exposure.

The effect of a displacement in right ascension is found as before, by allowing the line corresponding to a given value of p

[1] The constant k, *i. e.*, the scale of the ordinates, is so chosen that the inclinations of the lines are not greatly exaggerated, as compared with an actual photograph taken with a powerful instrument. The implied dispersion is about three times that of my own instrument in the yellow, or nearly the same as that of my instrument in the violet.

PLATE V

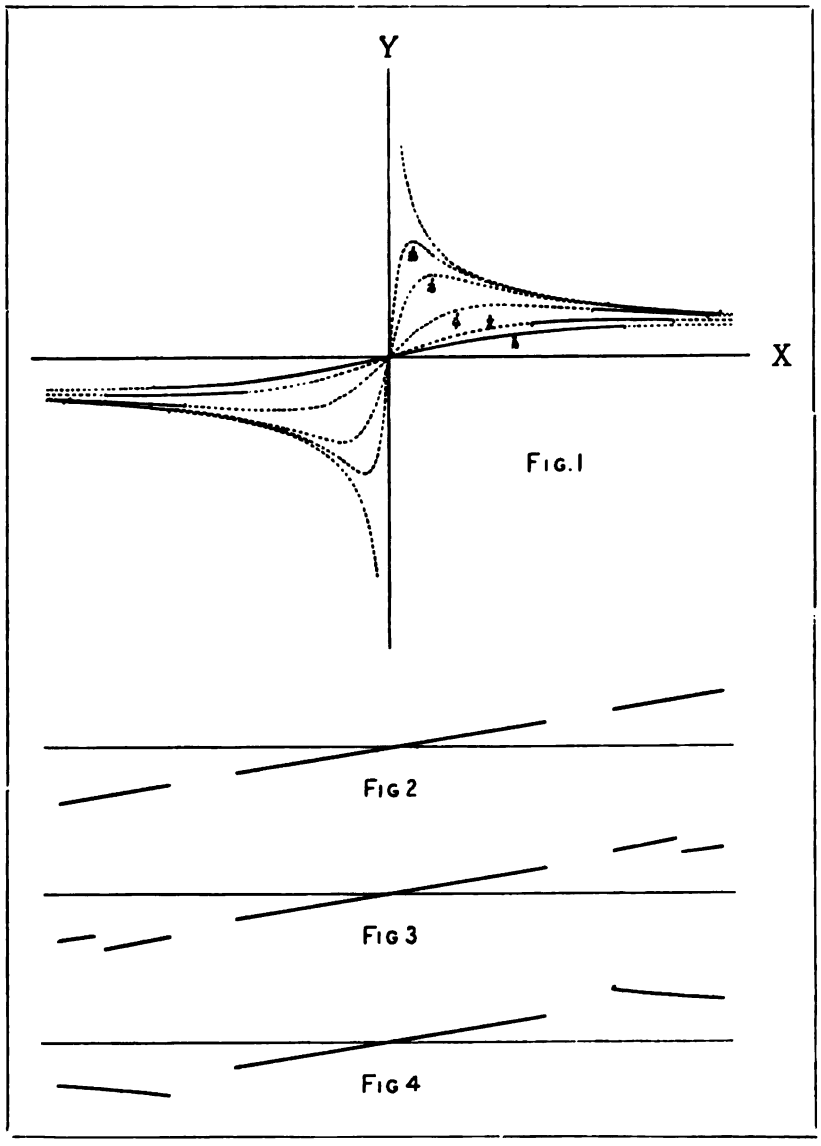

FIG. 1

FIG 2

FIG 3

FIG 4

to move, as a whole, parallel to the axis of x. If the displacement is so great as to amount to more than the whole width of the ansa, a widened line or band will be produced, parallel to an undisplaced line in the spectrum; but the inclination of the line is so small that no very detrimental effect will be produced on the definition. It will be observed that in every case displacements tend to make the lines in the spectra of the ansæ parallel to the undisplaced lines of the solar or other comparison spectrum. This result is entirely in accordance with my experience. I have always found that with imperfect guiding or an unsteady atmosphere the characteristic reversed inclination of the lines in the spectra of the ansæ, which is the proof of the meteoric constitution of the ring, is lost, although the definition of the lines may be very fair.

The effect of widening the slit can also be readily found by means of the curves in Fig. 1. If the brightness of the ring could be expressed as a continuous function of its radius it would be possible, by integration between limits, to determine the width, density, etc., of a photographed line in the spectrum for any position and width of the slit, although the results would hardly repay the labor.

There is one position of the slit for which the curve in the vicinity of the origin represents a real spectral line. If $p = 0.7$ of the radius of the outer ring, or $q = 0.7$ of the semi-axis minor of the ellipse, the slit will fall entirely on the ring where it crosses in front of the planet. The photographed spectral lines would then have a point of inflexion at the center; they would form a sharp contrast with the lines that would be obtained if the ring was solid, and a still sharper contrast with lines due to two solid rings having different periods of rotation. The curve for this position of the slit is represented by the innermost curve of Fig. 1. With careful guiding I think there would be no difficulty in making the very interesting experiment of photographing the spectrum of this part of the ring, but a reflecting slit would probably be required, like that devised by Dr. Huggins, as the whole image would have to be visible in the guiding eyepiece.

We now apply the more general case to the ring regarded as a solid body. As before,

$$y = av = aV \sin \alpha \cos \beta,$$

and $$x = R \sin \alpha.$$

Hence, $$\frac{y}{x} = a \frac{V}{R} \cos \beta.$$

For a solid ring $\frac{V}{R}$ is constant. The inclination of the line is therefore independent of the position of the slit, and the same remarks apply to the effect of instrumental displacements as in the case of a rotating sphere.

In Figs. 2, 3, and 4, which are drawn to the same scale as Fig. 1, I have represented the form of a line in the spectrum of the system of Saturn, when $p = 0$, according to three different hypotheses as to the constitution of the rings. In Fig. 2 the ring is supposed to be single; in Fig. 3 it is supposed to consist of two independent rings separated by the Cassini division (the structure assumed by Laplace), and in Fig. 4 it is regarded as made up of independent small bodies, this figure being the same as that of my former article. As I have there shown, a photograph of the spectrum with accurate guiding decides at once in favor of the last hypothesis. A less satisfactory test could also be obtained, even if the image wandered irregularly on the slit plate; for, according to the preceding investigation, the effect of displacements would be different in each of the three cases. In the case illustrated by Fig. 2 the definition of lines in the spectra of the ansæ and the ball would be the same; in the case of Fig. 3 the lines in the spectra of the ansæ would be very badly defined as compared with those of the ball, and in the case of Fig. 4 they would be better defined than the lines of the ball. It is hardly necessary to say that the geometrical sharpness of the lines in the figures is not to be expected under any circumstances in the case of a photograph, and the effect of displacement of the image is to produce a general blurring of the lines, the cause of which, on account of the indefiniteness of the image, could not be ascertained by simple inspection of the plate.

Minor Contributions and Notes.

NOTICE.

Attention is called to the fact that The Astrophysical Journal is not issued in July or September. The next number will be published August 1.

NOTES ON SCHMIDT'S THEORY OF THE SUN.

An objection which might be raised against Schmidt's theory of the Sun occurred to me some time ago, but I have found a very reasonable way of meeting it.

I said in my paper (see the February number of this Journal, p. 112) that I considered the assumption of a shallow reversing layer a very artificial one, and that Schmidt's theory had the advantage of not requiring it. But the observations made by Young and others during total eclipses seem to prove the existence of this layer. It is asserted by these observers that suddenly the whole spectrum is reversed, the arrangement of the bright lines being precisely the same as that of the dark lines a moment before. If these observations be accepted as conclusive, our theory encounters a serious difficulty. For it would follow that the white light of the Sun must have its origin at the apparent solar limb, since we cannot reasonably assume that all of the absorption takes place at this height, and none below.

But let us remember that we are led by various considerations to conclude that at this altitude the solar atmosphere is very rare, and that we also know hydrogen, sodium, magnesium, iron, etc., to be present in the chromosphere. Now, the atomic weight of iron is 56, and, according to Scheiner's *Spectralanalyse der Gestirne*, the atomic weights of all elements whose presence in the Sun has been definitely proved are less than 60 (lead excepted). I do not here include those elements which Lockyer affirms to be present (lead, cadmium, etc.); these (excepting lead) have atomic weights smaller than 120. Moreover, I believe that all or most of the *characteristic* lines of the solar spectrum have been identified with those of terrestrial substances. If this is so we see that the characteristic part of the solar spectrum is produced by elements

of small atomic weight, or, if we assume the elements to be, in general, arranged according to their atomic weights, by a certain comparatively narrow stratum of the gaseous body of the Sun. This need not, however, be as narrow as the "reversing layer" in the ordinary sense of the word. If in the usual theories the reversing layer has a depth AB, there is nothing to hinder the advocate of Schmidt's theory from assuming AB to be only the upper portion of a much deeper layer AC, in which these metallic vapors are found intermingled, though in general distributed in the order of their atomic weights. We may consider this layer to be as deep as the zone which sends no tangential rays to the observers. If it were still deeper the "reversing layer" in the ordinary sense of the word would seem to be higher than it is. Below this layer the heavier metals would be found. But as it has already been shown that this may be at a considerable depth it is possible that at this level the pressure is so great that these metals give a continuous spectrum. This would account for the fact that so few heavy metals have been found in the Sun. In the lower layers, however, the lines would be widened. This last fact obviously sets a limit to the depth which we can assume for such a reversing layer, for observation shows that most of the Fraunhofer lines are fairly sharp. The heavy metals, however, so far as they are present, ought to give widened lines. I do not know how far observation confirms this consequence of our theory. Possibly the bands in the spectrum of stars of Vogel's type III are due to this circumstance; this idea would seem to be confirmed by the fact that these stars are reddish, since this indicates that the ray has traversed a thick atmosphere.

Viewed in this connection, the fact that in eclipses the solar spectrum seems to be reversed for a few seconds can easily be explained. The layer containing the metals of small atomic weight produces the characteristic features of the spectrum, and on these rare occasions of total eclipse its upper portion is seen directly, without the continuous spectrum. If this view of the matter is correct the lines of the heavy metals ought not to be reversed; unless, indeed, the small amounts of these metals accidentally present at this elevation should be sufficient to show characteristic spectra.

It has been suggested to me by Professor Scheiner that if Schmidt's theory be true the absorption lines in the solar spectrum ought to appear very much broadened. For the theory assumes that the white

light has its origin at a certain depth below the apparent surface of the Sun, and that it is caused by the great pressure of the overlying strata. As we ascend from this depth we should find the continuous spectrum gradually changing into broad bands and finally into narrow lines. On account of the increased absorption the intensity of the bands should increase with the elevation, and the lines should therefore appear broad, and have no definite boundary.

The essential supposition in the above argument is that one and the same substance is found in all the successive strata, from the lowest to the highest. But is this the case? As has already been remarked, many appearances seem to indicate that the Sun is stratified into layers in which the elements are arranged according to their atomic (or molecular) weights. Of course the boundaries of the layers cannot be well defined; in these regions there must be a more or less complete mixture. On this supposition the above objection to Schmidt's theory disappears. For let us suppose the Fraunhofer lines to originate in a region where the pressure is not great enough to widen them appreciably; it is evident that they should belong to the lighter metals, such as sodium, magnesium, etc. (including iron). The heavier metals will be found lower, and owing to the great pressure their lines should be very broad. As they are nearer the center of the Sun than the lighter elements, the darkest part of their absorption bands should be much brighter than the narrow absorption lines of these lighter substances. The widened absorption lines should therefore appear simply as a less brilliant portion of the continuous spectrum. The theory thus indicates that the continuous background of the solar spectrum should show differences in brightness. I believe this is in accord with observation. If so, we have a new support for the theory. For differences in the intensity of the continuous spectrum would be difficult to explain by the ordinary theories of the constitution of the Sun. The density of the atmosphere above the photosphere is too small for any such action as that outlined above to take place; and to explain such an appearance as due to groups of lines too close together to be separately seen seems to be insufficient, on account of the great extent of the regions which, I believe, these appearances occupy.

Still another objection to the theory is frequently made. It is stated that if the apparently sharp boundary of the Sun is the result of refraction it would necessarily follow that the Sun must be in a very quiet condition. Let us examine this point a little more closely. If any-

where along the path of the light there is a disturbance its only influence upon the ray will result from a change of the index of refraction μ by $d\mu$. The consequence of this will be a change in α by $d\alpha$. We have

$$\mu r \sin \alpha = \mu_s r_s ;$$

hence

$$\frac{d\alpha}{d\mu} = -\frac{1}{\mu} \tan \alpha .$$

In a body of the second class we never have $\alpha = \frac{\pi}{2}$ in the regions we are considering; for we are not concerned with the lower spheres because the absorption will prevent their light reaching us. For the critical sphere α will, however, $= \frac{\pi}{2}$, and consequently $\tan \alpha = \infty$, but this ray cannot enter our eyes. For the neighboring spheres $\tan \alpha$ will be large. But as we have already mentioned, it is well known that the density of the gases at this altitude is extremely small, so that μ will not differ appreciably from 1. Thus in the higher regions a considerable disturbance can have no appreciable effect on the value of μ, because it is approximately equal to unity. We can therefore put $d\mu = 0$, and hence conclude that $d\alpha = 0$, *i. e.*, the direction of the ray cannot be changed by an appreciable amount. Consequently the remaining path of the ray will be unchanged, and likewise the value of r_s, the apparent semi-diameter of the Sun. So far only the higher regions have been considered, but it is obvious that where the value of μ differs considerably from 1 the density and pressure are so great that the spectrum of those regions must consist of greatly widened lines. Consequently the light from the spheres below a certain limit will not reach the eye. In the spheres above this limit $\frac{d\mu}{\mu}$ must always be a very small fraction, usually quite inappreciable. Hence $d\alpha$ must always be very small, and the above conclusion holds good.

These are the only real arguments I have heard against Schmidt's theory of the Sun, and it does not seem difficult to answer them. Of course I have advanced no *proof* of the theory, but I think enough has been said to show that it is well worth following out in its consequences. If we knew the critical temperature of the metallic vapors constituting the Sun, and the temperature of the Sun itself, it would of course be possible to decide at once which theory is correct. I think there must be bodies of both kinds in the universe; some too hot to contain con-

densed materials, to which our theory would apply, and others containing condensed matter in the form of a real photosphere. I believe it is too early to decide to which class our Sun belongs.

E. J. WILCZYNSKI.

The above extracts from two letters received from Mr. Wilczynski are of interest in suggesting certain criteria by which Schmidt's theory of the Sun may be tested. In the first place it should be pointed out that the investigations of Rowland have added many elements of high atomic weight to the list of those known to be present in the Sun. At least eighteen elements of atomic weight higher than 60 are certainly represented in the solar spectrum, and there is doubtful evidence of the presence of several others. Among the established cases may be mentioned those of rhodium (104), palladium (106), silver (108), cadmium (112), tin (119), barium (136), lanthanum (138), cerium (140), neodymium (145), erbium (166), and lead (206).[1] It is true that when the elements found in the Sun are grouped in the order of the intensity of lines in the solar spectrum the heavier elements are almost altogether confined to the second half of the list, but among them are carbon (12), scandium (44), and niobium (59), with potassium (39) at the foot of the column.[1] In Rowland's wave-length tables, which so far as published cover only a portion of the upper spectrum, there is at least one lanthanum line of intensity 12, and a barium line of intensity 8. On the other hand, it might be urged that the heavier elements have comparatively few lines in the solar spectrum. Of some of them this is true, but in Professor Rowland's list of the solar elements arranged according to the number of lines present in the solar spectrum we find zirconium (90) ninth and cerium (140) tenth, each with over 75 lines to its credit, neodymium (145) thirteenth, lanthanum (138) fourteenth, with such metals as magnesium (24), sodium (23) and aluminium (27) far below them.[1]

It is of course evident that the value of such comparisons as these must be lessened by the fact that the spectra of the elements are not all built upon a single type, but vary greatly both in the number and the intensity of the lines. There is also the further difficulty that the stratification of the solar atmosphere must be continually disturbed by the violent down and up rushes from which it is never free. Thus some of the heavier metallic vapors, which according to Schmidt's

[1] *Johns Hopkins University Circulars*, February, 1891.

In the small building that contains them will also be the shops for the construction and repair of special instruments and apparatus.

G. E. H.

ON THE PRESENCE OF HELIUM IN CLÈVEITE.

In the *Comptes Rendus* for April 16, Mr. P. F. Clève communicates to the Academy some interesting results obtained with specimens of the mineral clèveite, found at Carlshuus, Norway. When a mixture of the mineral with potassium bisulphate was heated in a combustion tube a gas was given off, which was passed over red-hot copper, and collected over a concentrated potash solution.

By comparing the spectrum of the gas with that of a tube of argon it was found that it contained no argon lines.

The following are the wave-lengths obtained by Thalén of the lines in the spectrum of the new gas. Curiously enough, some of the wave-lengths seem to refer to Ångström's and others to Rowland's scale:

Wave-length	Map	Intensity
6677.	Ångström	Moderate
5875.9	Micrometric measure	Strong
5048.	Rowland	Moderate
5016.		Strong
4922.		Moderate
4713.5	Ångström	Faint

The position of the second line was determined by interpolation in Rowland's table of standard wave-lengths.

Mr. Clève remarks: "It seems probable that this strong line of helium is accompanied on each side by two very faint lines." If a grating was used these may have been due to the ghosts which almost invariably accompany a very bright line.

Professor Young has pointed out in a recent letter that Thalén's lines at $\lambda 5048$, $\lambda 5016$, $\lambda 4922$ and $\lambda 4713.5$ probably coincide with chromosphere lines at $\lambda 5048.2$, $\lambda 5015.8$, $\lambda 4922.3$ and $\lambda 4713.4$ respectively.

The identification of the new line with D_3 (5875.982) may now probably be considered established, but a still more accurate measurement, or a direct comparison with the chromosphere line under high dispersion, is still to be desired.

In *Nature* for May 2, two papers communicated to the Royal Society on April 25, by Professors Ramsay and Lockyer, are printed

in full. The first describes the circumstances which led to the discovery of the new gas, and gives a qualitative comparison of the spectra in argon and helium tubes. Argon was found to be present in the helium tube, but there were sixteen easily visible lines present in the helium tube only, one of them the strong yellow line. From the fact that there were "two red lines strong in argon, and three violet lines strong in argon, but barely visible and doubtful in the helium tube," Professor Ramsay was led to suspect the presence in atmospheric argon of a gas absent from the argon found associated with helium.

Professor Lockyer's paper describes his visual and photographic observations of the gas given off by particles of Uraninite when heated in a glass tube. Most of the lines photographed appear to be due to the structure-spectrum of hydrogen, but several were obtained which are near lines in the solar chromosphere. Professor Lockyer did not find in the gas the argon and other special lines noted by Crookes, nor could he see most of the lines measured by Thalén. G. E. H.

NOTE ON THE HUGGINS METHOD OF PHOTOGRAPHING THE SOLAR CORONA WITHOUT AN ECLIPSE.

In the light of the conclusion noted last month in regard to the exposure necessary in photographing the solar corona without an eclipse I regret to find that in some of my papers I have quite unintentionally misrepresented Dr. Huggins' method of coronal photography. He has clearly pointed out from the first that what he was attempting to photograph was the increased brightness of the sky about the Sun due to the presence of the corona. The exposure required in this case is determined by the brightness of the sky and not by the brightness of the corona. Whether or not the corona will be visible in a photograph made in this way evidently depends in large degree upon the ratio of its brightness to that of the sky. G. E. H.

ON THE CAUSE OF THE GRANULATION OF THE SURFACE OF THE SUN.[1]

The views of astronomers as to the density of the gases at the surface of the Sun, *i.e.*, in the outer layers of the photosphere, differ very

[1] Translated from *A. N.* 3279.

widely, but in general the density in these regions seems to be regarded as exceedingly small. Several years ago I had already pointed out[1] that this almost inconceivable tenuity of the gases at the Sun's surface must be taken into account in framing solar theories in the future. It has not received sufficient attention in most of the theories that have been advanced hitherto, and the changes on the Sun's surface which we have had an opportunity of observing are looked upon as tremendous natural convulsions. The necessity for this view entirely disappears under the assumption of extremely small density.

It is not necessary to review here in detail the grounds on which this assumption is based; I will merely mention the narrowness of the spectral lines, and the fact that the orbital relations of comets which have passed very close to the surface of the Sun have not been perceptibly disturbed by the action of resisting forces.

Gases at a high temperature and in a state of great tenuity are in a nearly ideal condition, and hence the laws of the mechanical theory of heat can be applied to them in the widest bearings of the theory. Dr. Egon v. Oppolzer has taken advantage of this favorable circumstance, and in a very noteworthy paper[2] he has developed a theory of Sun-spots on a rigid mathematical basis, in a manner exactly corresponding to the methods of modern meteorology. Even if we should not agree with all the consequences of this theory, we must give Dr. v. Oppolzer the credit of at least showing the way by which mechanical interpretation of the phenomena in the Sun's atmosphere will lead to the desired end.

I believe now that I can take still another step in advance, by applying to the Sun the investigations of Helmholtz on waves in the terrestrial atmosphere, which have become of such fundamental importance to meteorology.

According to the theory of Helmholtz, air waves are produced when two layers of air, differing in temperature (*i.e.*, in density), glide past each other, just as waves are produced by the gliding of air over water. If the lower layer is nearly saturated with aqueous vapor, condensation will take place in the wave crests on account of the diminution of pressure. Under these circumstances the elevations or wave crests appear as clouds, the depressions or troughs as transparent inter-

[1] *Spectralanalyse der Gestirne*, p. 208.

[2] "Ueber die Ursache der Sonnenflecken." *Sitzungsber. d. Wien. Akad.* 1893.

spaces, and thus a more or less regular series of cirrus clouds is produced. If the impulses resulting in wave formation act in two different directions the waves cross, and we have the cloud effect popularly known as a mackerel sky. Helmholtz has shown that, under the assumption of temperatures of 0° and 10° for the two layers, waves of nearly a kilometer length must arise when the velocity of the air is no more than 10 meters per second, while powerful atmospheric movements produce waves up to 30 kilometers in length, which are then no longer recognized as such by their appearance, but are revealed by a periodic strengthening of the phenomenon, or gusts.

The great similarity in appearance between the solar photosphere and terrestrial cirrus has long been recognized, and there is no doubt that the necessary conditions for the application of Helmholtz's theory to the solar atmosphere — the existence of layers of different temperature, the over-saturated state of condensable gases (in the photosphere), and variously directed currents in the different layers — are found in the Sun. I therefore regard the bright grains of the photosphere as wave crests, rendered visible by condensation, or at least an increase of condensation, of two crossing systems of waves.

The increased condensation in the wave crests produces a diminution of their specific gravity, and hence their elevation tends to be greater than that required by theory alone.

It seems to me that no important objection can be urged against the explanation of the solar granulation here briefly indicated, unless the length of the waves on the Sun's surface, that is, the mean interval between the separate grains, leads to inadmissible values of the differences of temperature or of velocity. An exact computation cannot be made, as the choice of constants in the case of the Sun is too unrestricted. On the other hand it is easily seen that a very favorable value for Helmholtz's σ is probable in consequence of the high temperature, and hence waves of the required length (1″ to 3″ = 1000 to 3000 kilometers) would result without the necessity of extraordinary wind velocities.

It is precisely the circumstance that the granulation is distributed over the entire surface with considerable regularity, and particularly the fact that no grains strikingly larger than the average occur (differing in size from the latter, for example, as our cirrus clouds differ from nimbus), that makes this explanation appear more probable than others which have been attempted hitherto.

I shall not trace the further consequences of my assumption at present with anything like completeness, and shall merely point out two of them. According to these views the photosphere is to be regarded as a comparatively very thin layer, its thickness being perhaps of the same order as the length of the waves formed in it, *i.e.*, a few seconds of arc; further, the velocity of the currents in the layers does not seem to differ very greatly in the different heliocentric latitudes. In this connection a more careful investigation of the average size of the grains in different latitudes would be of much interest.

J. SCHEINER.

Change of address.—The attention of contributors to THE ASTROPHYSICAL JOURNAL is called to the fact that after July 1, 1895, my address will be *Yerkes Observatory, Lake Geneva, Williams Bay P. O., Wisconsin.* All papers for publication and correspondence relating to contributions and exchanges as well as all personal communications should be sent to this address. GEORGE E. HALE.

Reviews.

Beobachtungen angestellt am Astrophysikalischen Observatorium in O Gyalla. XV und XVI Band.

The double volume containing the results of observations made at O Gyalla in 1892 and 1893 is mainly devoted to a record of Sun-spots and to other observations of the Sun's surface. There are also observations of comets and meteors, and a few spectroscopic observations of various objects. The personnel of the observatory has lately been considerably increased.

Two new spectroscopes, recently constructed for astronomical research, are described and illustrated, but neither is of a form which can be recommended. One is a direct-vision half-prism spectroscope for visual observation, and the other a spectrograph with triple direct-vision prism. A diagonal eyepiece for viewing the slit, like that which has long been in use on many Star spectroscopes, is described as a novelty.

Ein neues Spectralphotometer. Arthur König. *Wied. Ann.* 53 (1894).

The spectrophotometer described by the author is constructed as follows: The slit of an ordinary prismatic spectroscope is covered by a plate, in which are two closely adjacent apertures; one of these is provided with a totally reflecting prism, so that two sources of light can be compared. Between the collimator and the prism of the spectroscope is a Rochon prism, so placed that a vertical separation of images is produced (the slit and the refracting edge of the prism are supposed to be vertical). Between the prism and the observing telescope is a bi-prism of glass with its refracting edges horizontal. By the combined action of the prisms eight spectra are formed in the focal plane of the observing telescope, only two of which are allowed to reach the eye, and therefore require consideration; one is formed by light coming from the upper slit, the other by light from the lower slit, and the two are polarized in planes at right angles. Further, the angles of the prisms are so chosen that the two spectra are superposed.

In the focal plane of the observing telescope is placed a diaphragm, pierced with a vertical slit, the length of which is considerably less than the width of the spectrum. An eye looking through this slit sees the objective, divided horizontally by the bi-prism into two parts, which are in general unequally illuminated. (No eyepiece is used, except for adjustment.) Finally, between this slit and the eye is placed a Nicol prism, provided with a graduated circle, by which equality of illumination can be restored, and the ratio of brightness determined by a well-known law.

With two luminous sources of equal brightness the illumination of the field is not equal, as the loss of light by reflection at the faces of the prism is different for the two sets of polarized rays; the correction is, however, easily obtained by means of the Nicol prism. The adjustments are somewhat difficult, but when once made they are not liable to be disturbed, and the performance of the instrument is very satisfactory. J. E. K.

Untersuchung der spectralen Zusammensetzung verschiedener Lichtquellen. ELSE KÖTTGEN. *Wied. Ann.* 53 (1894).

WITH the spectrophotometer of Dr. König, Fräulein Köttgen has made a study of various illuminating flames, using the flame of a triple gas-burner as a standard of comparison. The results are exhibited in the form of tables, and also by means of curves. Direct sunlight, light reflected from white clouds, and the light from a clear blue sky were also compared, the curve representing the last measurements having the most rapid ascent toward the violet. In comparing these results with those of other observers, Miss Köttgen has overlooked the elaborate investigations of Langley published in his memoir "On the Temperature of the Surface of the Moon" in Vol. III of the *Memoirs of the National Academy of Sciences.* The instrumental and other difficulties attending such comparisons are very great, and it is not surprising that the results obtained by different observers differ greatly, particularly in the upper spectrum. The author's results agree well with those of Vogel. J. E. K.

RECENT PUBLICATIONS.

A LIST of the titles of recent publications on astrophysical and allied subjects will be printed in each number of THE ASTROPHYSICAL JOURNAL. In order that these bibliographies may be as complete as possible, authors are requested to send copies of their papers to both Editors.

For convenience of reference, the titles are classified in thirteen sections.

1. THE SUN.

DESLANDRES, H. Rayonnement ultra-violet de la couronne solaire, pendant l'eclipse totale du 16 avril 1893. C. R. 120, 707–710, 1895.

GEELMUYDEN, H. The Solar Eclipse of 1896, August 8. Obs'y 18, 190–193, 1895.

LOCKYER, J. NORMAN. The Sun's Place in Nature, III, IV, V. Nat. 51, 565–567; 590–592. 52, 12–14, 1895.

MAUNDER, E. W. Notes on a Solar Photograph. Knowl. 18, 107–110, 1895.

RAJNA, M. Sull' escursione diurna della declinazione magnetica a Milano in relazione col periodo delle macchie solari. Rend. R. Ist. lombardo d. sc. e let. 28 (Ser. 2).

RICCÒ, A. Tentativi per fotographare la corona solare senza ecclisse. Mem. Spettr. Ital. 24, 21–30, 1895.

SCHMIDT, A. Erklärung der Sonnenprotuberanzen als Wirkungen in einer hochverdünnten Atmosphäre der Sonne. Sir. 23, 97–109, 1895.

SIDGREAVES, W. The Wilsonian Theory and the Stonyhurst Drawings of Sun-spots. M. N. 55, 282–287, 1895.

TACCHINI, P. Sulla distribuzione in latitudine dei fenomeni solari osservati nel 3° e 4° trimestre 1894 al Regio Osservatorio del Collegio Romano. Mem. Spettr. Ital. 24, 44–59, 1895.

TACCHINI, P. Observations solaires des 2e 3e et 4e trimestres, 1894. C. R. 120, 710–712, 1895.

3. STARS AND STELLAR PHOTOMETRY.

BECKER, E. Bemerkungen zu dem Stern BD. +22°.3272. A. N. 137, 291, 1895.

BROWN, E. and WILLIAM NOBLE. Variable Orange Stars. Obs'y **18**, 200–202, 1895.

CLERKE, A. M. Some Anomalous Sidereal Spectra. Obs'y **18**, 193–196, 1895.

CLERKE, A. M. Another Spectroscopic Binary Star. Knowl. **18**, 110–112, 1895.

SCHUR, W. Beobachtungen der veränderlichen Sterne δ Cephei η Aquilæ und β Lyræ. A. N. **137**, 297–329, 1895.

4. STELLAR SPECTRA, DISPLACEMENTS OF LINES AND MOTIONS IN THE LINE OF SIGHT.

PANNEKOEK, A. Sur le mouvement du système solaire. Bull. Astr. **12**, 193–196, 1895.

TISSERAND, F. Remarques sur les vitesses radiales des nébuleuses Bull. Astr. **12**, 196–198, 1895.

5. PLANETS, SATELLITES AND THEIR SPECTRA.

ELGER, T. Gwyn. Selenographical Notes. Obs'y **18**, 196, 1895.

KLEIN, H. J. Die neuen Mondphotographien der Pariser Sternwarte. Sir. **23**, 112–115, 1895.

MOORE, T. J. Observations of the vertical diameter of the Planet Jupiter. M. N. **55**, 306–308, 1895.

POINCARÉ, A. Sur les relations des déplacements en latitude des lignes de maxima barometrique avec les mouvements en déclinaison de la Lune. C. R. **120**, 792–794, 1895.

PUISEUX. La Lune, son état actuel et son histoire. Bull. Soc. Astr. France, May, 1895, 148–157.

THOMSON, J. P. The Transit of Mercury, 1894 November 11 ; Egress. M. N. **55**, 316–320, 1895.

WEINEK, L. Ueber die Verwerthung photographischer Mondaufnahmen. A. N. **137**, 291, 1895.

6. COMETS, METEORS AND THEIR SPECTRA.

DENNING, W. F. April Meteors. Nat. **52**, 33, 1895.

DOBERCK, W. On Heis' T Radiants. Obs'y **18**, 199, 1895.

8. TERRESTRIAL PHYSICS.

BAUER, L. A. On the Secular Motion of a Free Magnetic Needle, I Phys. Rev. **2**, 455–466, 1895.

PERRY, JOHN. The Age of the Earth. Nat. **51**, 582–585, 1895.

SOLLAS, W. J. The Age of the Earth. Nat. **51**, 533–534, 1895.

9. EXPERIMENTAL AND THEORETICAL PHYSICS.

BURMESTER, L. Homocentrische Brechung des Lichtes durch das Prisma. Z. f. Math. u. Phys. 40, 65–91, 1895.

CAMICHEL, C. Absorption de la lumière dans les cristaux. Jour. de Phys. 4 (3me sér.), 149–154, 1895.

EVERSHED, JOHN. Experiments on the Radiation of Heated Gases. Phil. Mag. 39, 460–476, 1895.

FOUSSEREAU, G. Sur l'astigmatisme des lentilles infiniment mince et des miroirs sphériques. Jour. de Phys. 4 (3me sér.), 169–178, 1895.

GOUY. Sur la régularité du mouvement lumineux. C. R. 120, 915–917, 1895.

MERRITT, ERNEST. On the Absorption of Certain Crystals in the Infra-red as Dependent on the Direction of the Plane of Polarization. Phys. Rev. 2, 424–442, 1895.

PASCHEN, F. Dispersion und Dielectricitätsconstante. Wied. Ann. 54, 668–674, 1895.

POINCARÉ, H. Sur le Spectre cannelé. C. R. 120, 757–762, 1895.

VOGEL, H. W. Ueber Farbenwahrnehmungen. Wied. Ann. 54, 745–751, 1895.

WIEDEMANN, EILHARD, und G. C. SCHMIDT. Ueber Luminescenz. Wied. Ann. 54, 604–625, 1895.

10. THE SPECTRA OF THE ELEMENTS.

BERTHELOT. Observations sur l'argon: spectre de fluorescence. C. R. 120, 797–801, 1895.

CROOKES, W. On the Spectra of Argon. Proc. R. S. 57, 287–290, 1895.

GRAMONT, A. DE. Sur les spectres du sélénium et de quelques séléniures. C. R. 120, 778–781, 1895.

HARTLEY, W. N. On the Spark Spectrum of Argon as it Appears in the Spark Spectrum of Air. Proc. R. S. 57, 293–296, 1895.

12. INSTRUMENTS AND APPARATUS.

THIERRY, MAURICE DE. Sur un nouvel appareil dit "héma-spectroscope comparateur." C. R. 120, 775–777, 1895.

WEISS, P. Un galvanomètre extrêmement sensible. C. R. 120, 728–731, 1895.

13. GENERAL ARTICLES, MEMOIRS AND SERIAL PUBLICATIONS.

CLÈVE, P.-F. Sur la présence de l'helium dans la clévéite. C. R. 120. 834–835, 1895.

EDITOR OF *Nature*. Improvements in Photometry. Nat. 51, 558–561, 1895.

EDITOR OF *Nature*. Terrestrial Helium (?). Nat. 51, 543–544, 1895.

GUNTZ. Sur une expérience simple montrant la présence de l'argon dans l'azote atmosphérique. C. R. 120, 777–778, 1895.

HILL, E. A. Argon, Prout's Hypothesis, and the Periodic Law. Am. Jour. 49 (3 ser.), 405–417, 1895.

LOCKYER, J. NORMAN. Terrestrial Helium? Nat. 51, 586, 1895.

OLSZEWSKI, K. The Liquefaction and Solidification of Argon. Proc. R. S. 57, 290–293, 1895.

RAMSAY, W.–J. NORMAN LOCKYER. Terrestrial Helium (?). Nat. 52, 7–8, 1895.

RAYLEIGH, LORD, and W. RAMSAY. Argon, a New Constituent of the Atmosphere. Proc. R. S. 57, 265–287, 1895.

NOTICE.

The scope of THE ASTROPHYSICAL JOURNAL includes all investigations of radiant energy, whether conducted in the observatory or in the laboratory. The subjects to which special attention will be given are photographic and visual observations of the heavenly bodies (other than those pertaining to "astronomy and position"); spectroscopic, photometric, bolometric and radiometric work of all kinds; descriptions of instruments and apparatus used in such investigations; and theoretical papers bearing on any of these subjects.

In the department of *Minor Contributions and Notes* subjects may be discussed which belong to other closely related fields of investigation.

It is intended to publish in each number a bibliography of astrophysics in which will be found the titles of recently published astrophysical and spectroscopic papers. In order that this list may be as complete as possible and that current work in astrophysics may receive appropriate notice in other departments of the JOURNAL, authors are requested to send copies of all papers on these and closely allied subjects to both Editors.

Articles written in any language will be accepted for publication, but unless a wish to the contrary is expressed by the author, they will be translated into English. If a request is sent *with the manuscript* twenty-five reprint copies of each paper, bound in covers, will be furnished free of charge to the author. Additional copies may be obtained at cost price. No reprints can be sent unless a request for them is received before the JOURNAL goes to press.

The Editors do not hold themselves responsible for opinions expressed by contributors.

THE ASTROPHYSICAL JOURNAL will be published on the first day of every month except July and September. The annual subscription price for the United States, Canada and Mexico is $4.00; for other countries in the Postal Union it is 18 shillings. Correspondence relating to subscriptions and advertisements should be addressed to *The University of Chicago, University Press Division, Chicago, Ill.*

Wm. Wesley & Son, 28 Essex St., Strand, London, are sole foreign agents, and to them all European subscriptions should be addressed.

All papers for publication and correspondence relating to contributions and exchanges should be addressed to *George E. Hale, Kenwood Observatory, Chicago, Ill.* After July 1, 1895, Professor Hale's address will be *Yerkes Observatory, Lake Geneva, Williams Bay P. O., Wisconsin.*

PLATE VI

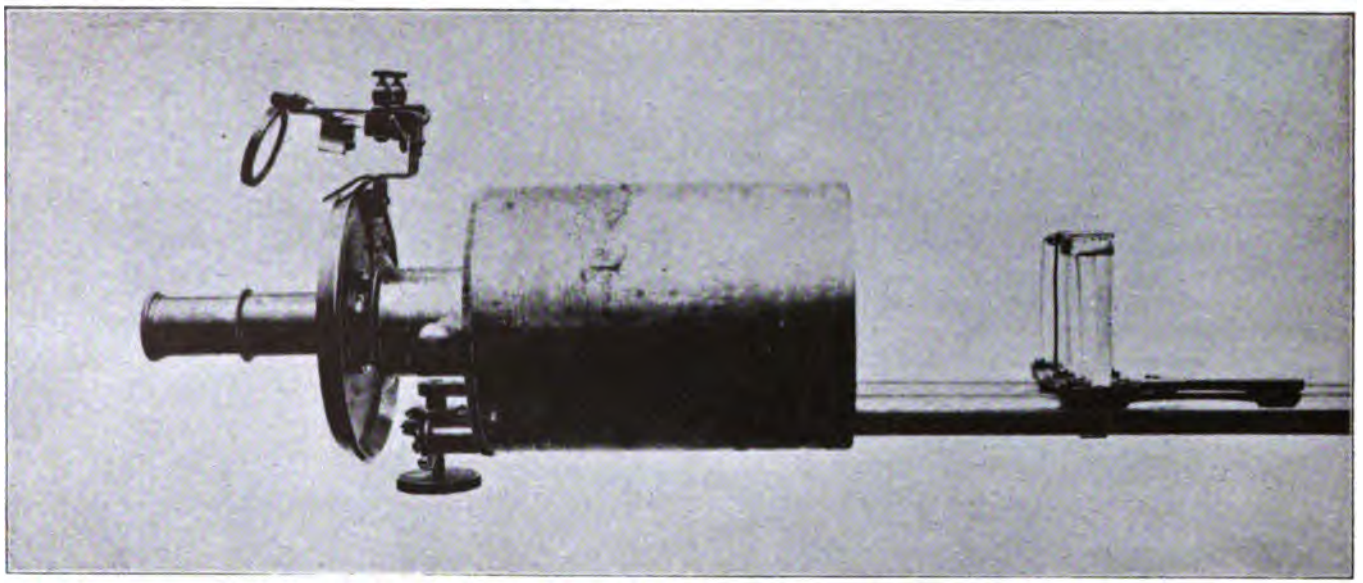

A NEW FORM OF STELLAR PHOTOMETER

THE

ASTROPHYSICAL JOURNAL

AN INTERNATIONAL REVIEW OF SPECTROSCOPY
AND ASTRONOMICAL PHYSICS

VOLUME II AUGUST 1895 NUMBER 2

A NEW FORM OF STELLAR PHOTOMETER.

By EDWARD C. PICKERING.

IN 1877 observations were undertaken at the Harvard College Observatory of the relative light of the components of double stars. The photometer chiefly employed is described in the *Annals* II, 1, Fig. 1, and is still in use. It consists of a double image prism which can be moved along the axis of the telescope to any desired distance from the focus and a Nicol prism in front of the eyepiece which can be turned by an amount which is measured with a graduated circle and index. This instrument leaves little to be desired in the measurement of close double stars. Nearly all sources of systematic error may be eliminated when it is properly used, and the relative brightness of two adjacent stars may be determined with great accuracy. Besides the measures given in Volume XI, this photometer has been used for many years in measuring the brightness of the satellites of Jupiter when undergoing eclipse and also for measuring variable stars and doubles. Examples of the accuracy attainable with it will be found in the *A. N.*, 134, 348 and 135, 127, from which it appears that the results on different nights will give average deviations considerably less than a tenth of a magnitude. This instrument gave rise also to the meridian

photometer, which differs from it in principle only by bringing together the images of stars formed by two object-glasses instead of two images formed by the same object-glass, so that stars however distant can be compared. The same degree of accuracy is not, however, attainable with the meridian photometer, since owing to varying density of the air, haze, and other causes, the images of the stars compared will not resemble each other as closely when they are distant as when they are adjacent. A modification of the first of these photometers attached to the fifteen-inch equatorial enables two stars as much as 5′ apart to be compared. But this seems to be about the limit attainable with a telescope of this size. With a smaller telescope more distant stars may be compared, but of course only comparatively bright stars can then be measured. Three difficulties arise when the distance between the stars is large. First, the double-image prism must be large or a portion of the object-glass will be cut off and light thus lost when the prism is moved far from the focus. Secondly, the images will be colored and will in fact become short spectra, since the double-image prisms are not achromatic. The lengths of these spectra are nearly proportional to the apparent angular distance apart of the objects compared. When the stars differ in color, as frequently happens with double stars, the difference in the spectra introduces a new form of error. Thirdly, if double-image prisms having a large angle of separation are used to compare distant stars, the emergent pencils formed by the two images of the object-glass will only partly overlap and thus introduce a new source of error. A portion of one of the pencils may be cut off by the edge of the pupil of the eye, or the unequal transparency of different portions of the cornea may unduly diminish the light of one star.

All of these difficulties are avoided by the form of photometer represented in Plate VI. The double-image prism is placed at the focus, as in the meridian photometer, and the two images of the object-glass are formed by two achromatic prisms which can be slid by a chain and sprocket wheel to any desired distance from

the focus. A screw is cut on the axis of the sprocket wheel, and turns a wheel which is divided so as to indicate the position of the prisms and accordingly the distance apart of the stars. A Nicol prism and eyepiece are placed behind the double-image prism, and the position of the Nicol prism is read by a graduated circle and index. A Foucault prism is in practice found preferable to a Nicol, since although the loss of light is slightly greater, the field is less restricted.

The angle of separation of the images formed by the double-image prism is nearly equal to the sum of the deviations of the achromatic prisms. The emergent pencil of the ordinary image of one, therefore, nearly coincides with the emergent pencil of the extraordinary image of the other, as in the case of the meridian photometer. As in that instrument the two remaining pencils are cut off by the eyestop. In fact the theory of this photometer is the same as that of the meridian photometer, the two images of the object-glass taking the place of the two object-glasses of the latter instrument. Both instruments have the same advantages as regards the possibility of eliminating nearly all forms of systematic error. The images of two stars may be brought together by moving the achromatic prisms towards or from the focal plane of the telescope and by rotating the whole photometer. Each set of measures consists of settings in the four positions of the Nicol prism in which the images of the two stars appear equal. The images are always brought near together and reversed between the second and third settings. After every eight settings the entire instrument is rotated 180°, since it is found that certain sources of systematic error are thus eliminated. Several sets of measures, generally four or six, are made of each object observed. This is found advantageous, since several minutes are always expended when setting a large telescope on a new object, in turning the dome, moving the chair, reading the circles, identifying the objects, and adjusting the photometer. When this is done it saves time to repeat the measures and thus reduce the accidental errors as much as possible. With the meridian photometer all these adjustments

are made in a few seconds. It is therefore better with this instrument to take each evening only one, or at most two sets and repeat the measures on several evenings. But likewise, with the new photometer, each object is regularly observed on as many as three dates.

One-half of the light of each star is lost in the process of polarization. The losses by reflection and absorption of the various prisms used reduce the brightness of the stars by at least one magnitude. This is equivalent to a reduction of the aperture of the telescope by about one-third when the photometer is used. The faintest stars that can be measured with the fifteen-inch telescope are of about the 13.5 magnitude. When the greatest accuracy is desired the difference in brightness of the stars compared should not exceed five or six magnitudes, although it is possible to measure as large intervals as eight or nine magnitudes. In the photometer represented in Plate VI, the images are separated 4° by the double-image prism. The achromatic prisms are about six centimeters on a side and the deviation of the light which they occasion is about 2° 15′. They may be moved about 90 centimeters along the axis of the telescope. Their combined deviation is somewhat greater than that of the double-image prism when they are brought near it, but it is less when they are moved to the other end of the photometer. The two emergent pencils exactly coincide only for a certain position of the prisms, but they never separate by an amount likely to cause error. When the prisms are at their greatest distance from the focal plane the images of two stars 35′ apart may be brought together. This distance becomes 3′ when the prisms are moved near the double-image prism. In either extreme position the field is somewhat limited, since a portion of the emergent pencil may be cut off if the image is not in the center of the field. This is best tested by covering the center of the object-glass and throwing the stars out of focus. Their images will then appear as circular rings of light which will be broken, that is, will become incomplete circles, if any portions of the cones of light are cut off.

Since stars as distant as 35′ may be compared, at least one star as bright as the eighth or ninth magnitude would probably always be available for comparison. The brightness of this star can afterwards be determined with the meridian photometer and the scale of that instrument thus extended to any star brighter than the fourteenth magnitude. In this photometer the two stars are compared directly; the accidental errors should therefore be less than in the Zöllner photometer and similar instruments, in which each star in turn is compared with another source of light.

This photometer is now attached to the fifteen-inch equatorial of this Observatory. It is regularly used on almost every clear night by Mr. O. C. Wendell, who made the observations described below in three tests which have been made of the instrument.

As the first of these tests, three stars were selected, *B.D.*+79° 169,+79° 171 and a star of the eleventh magnitude preceding *B.D.*+79° 169 by 29ˢ.9 and north 7′.8. The brightness of each of these stars was then compared with the other two. The difference in brightness of the first and third exceeds six magnitudes and is as great an interval as can be accurately measured. Four sets of four measures each were made on May 3, 6, 29 and June 10, 1895, with the results 6.24, 6.40, 6.38 and 6.48. The mean of all is 6.38, showing that one star is about 356 times as bright as the other. The individual sets show an average residual of ±0.081, and the results for the different nights, ±0.065. Each reading differed only about 3° from the point where the images entirely disappeared, and a portion of the error arises from the difficulty in measuring this small angle. The circle is divided to degrees and is estimated to tenths. An error of one-tenth corresponds to a change in the result of 0.07 of a magnitude. If such small angles were ordinarily to be measured it would be better to have the circle more finely divided and moved by a tangent screw. Their effect on the final result is, however, nearly inappreciable. When smaller differences in magnitude were to be measured the results were still more accordant. Measures on the same nights of the difference in magnitude of +79° 169 and +79° 171 gave the results 3.54, 3.46, 3.48 and 3.56. The mean

is here 3.51 and the average deviation of the individual sets is ±0.036, and of the nights ±0.040. The measures of the two fainter stars were 2.61, 2.58, 2.72 and 2.69; mean 2.65, average deviation of sets, ±0.033; of nights, ±0.055. It will be noticed that the sum of the two smaller intervals, 3.51+2.65=6.16, is slightly less than the larger interval, 6.38. This is probably due to the convergence of the rays in the cone from the object-glass, owing to which a very bright star cannot be made to entirely disappear. (See *H. C. O. Annals*, **23**, 135.) A correction, which would be insensible unless the intervals are large, might be applied if future observations confirm this source of error.

A second test of this instrument consisted in measuring the light of a variable recently found by Mrs. Fleming in the constellation Cancer. Its approximate position for 1900 is R. A. $9^h\ 40^m$; Dec. $+25°\ 39'$. It was compared on four nights with the star *B.D.*+26° 1901, mag. 7.3, which precedes it about $2^m\ 0^s.8$, and is north of it $22'.7$. The measures on May 10, 11, 13 and 16, 1895, gave the magnitudes 5.04, 5.19, 5.18 and 5.31, the average deviations of the separate sets being ±0.033, ±0.043, ±0.025 and ±0.042 respectively. The variation is thus confirmed, notwithstanding its small amount during this interval. On June 12, 1895, the variable was too faint for measurement, but a comparison with a star about three-tenths of a magnitude brighter gave the interval 5.92, with an average deviation of the sets ±0.122. The variable must therefore have changed by more than a magnitude. The average deviation is larger than usual, probably owing to the extreme faintness of the star.

A third test consisted in a series of continuous observations of the variable star U Ophiuchi on the evening of June 8, 1895. This star is of the Algol type, one of its minima occurring on June 8 at $14^h.8$ G. M. T. This star was compared continuously for three hours and a half with the star *B.D.*+1°3411, which is about 36′ distant. The total number of settings was 308. The Moon was nearly full and the sky was covered with thin cirrus clouds irregularly distributed, which prevented observations with other instruments. One of the advantages of this form of pho-

tometer, especially when the stars compared are adjacent, is that passing clouds ordinarily affect equally the brightness of both stars compared, so long as the observations are reduced to the photometric scale. This would not be the case with the scale of Argelander or other empirical scales. Even the correction for atmospheric absorption, which should always be applied if great accuracy is desired, varies with the magnitude if the photometric scale is not used. It is then difficult, if not impossible, to apply it.

The error due to passing clouds increases with the distance apart of the stars, and, perhaps, caused the large residual in the second group of observations described below. All of the observations are grouped in the following table. Each group was composed of four sets of four settings each, except the last group, which contained five sets. The Greenwich mean time is followed by the observed difference of magnitude of U Ophiuchi and *B.D.*+1°3411, the latter star being always the fainter. The third column gives the average deviation of the four sets of which each group is composed. The fourth column gives the assumed true difference in brightness found graphically, and the last column gives the residual found by subtracting the fourth column from the second.

G. M. T.	Obs. Mag.	A. D.	Curve	O.−C.	G. M. T.	Obs. Mag.	A. D.	Curve	O.−C.
14h 9m	0.50	.068	0.50	.00	16h 2m	0.89	.050	0.97	−8
14 22	0.28	.150	0.50	[−.22]	16 14	1.11	.028	1.05	+6
14 33	0.53	.028	0.50	+ 3	16 33	1.16	.050	1.16	0
14 43	0.51	.045	0.54	− 3	16 45	1.23	.018	1.22	+1
14 55	0.56	.055	0.57	− 1	16 54	1.29	.052	1.26	+3
15 9	0.70	.040	0.65	+ 5	17 1	1.34	.030	1.27	+7
15 17	0.77	.042	0.69	+ 8	17 10	1.26	.065	1.27	−1
15 35	0.86	.060	0.81	+ 5	17 21	1.22	.040	1.27	−5
15 43	0.77	.160	0.87	−10	17 29	1.20	.034	1.27	−7
15 52	0.94	.072	0.93	+ 1					

The average deviations of the individual sets is ±0.057, or, omitting the second group, ±0.052. The corresponding average deviations of the individual groups are ±0.051 and ±0.041. All of these values will be considerably diminished if we use probable errors instead of average deviations.

In conclusion, this form of photometer may be recommended to astronomers having charge of large telescopes as a simple means of determining the brightness of the fainter stars. The star is compared directly with a brighter star without using any intermediate standard. The accidental errors are thus reduced, and since the images exactly resemble each other and may be reversed, almost all forms of systematic errors may be eliminated. Stars as faint as the fourteenth magnitude may be measured with a large telescope with all the accuracy of a brighter star, the average deviations not much exceeding a twentieth of a magnitude. The reduction is simple, and no undetermined constants are involved, the law of variation of the light depending on the fundamental principles of optics. The instrument is portable and easily removed or replaced. It is not difficult by means of it to determine the brightness of any star one to one and one-half magnitudes brighter than the limit of visibility of the telescope employed, with a computed probable error not exceeding three or four hundredths of a magnitude.

As there can be little doubt that the photometric scale of Pogson will eventually come into universal use, photometric measures of the fainter variables, comparison stars, asteroids and satellites are much to be desired.

June 13, 1895.

ON THE FORMS OF THE DISKS OF JUPITER'S SATELLITES.[1]

By S. I. BAILEY.

EARLY in 1894 I attempted to make some observations on the forms of the disks of Jupiter's satellites, using the thirteen-inch refractor of the Arequipa Observatory.

Owing to the exceptional persistency of the cloudy season at that time I was able to observe them on a few nights only, and when Jupiter was low in the western sky.

In Arequipa the seeing after midnight is usually bad, which prevented exact observations toward the close of that year before the beginning of the cloudy season.

During the early months of 1895, however, these satellites were observed under reasonably good conditions. Below are given the dates and times of observation, and a summary of notes. The time given is Arequipa mean time:

January 17, 10:00–12:00 P.M. All four satellites round, except that I, before occultation, appeared elongated in same direction as Jupiter. No change in appearance of II, III and IV. Seeing, 4; scale, 1–5.

January 25, 8:00–10:00 P.M. All four round, except that I, before transit, seemed slightly elongated in same direction as Jupiter, but an hour later in transit looked perfectly round. Seeing, 4.

February 20, 10:00–11:15 P.M. All four apparently elongated slightly in same direction and amount. Seeing, 3–4. Adjustment of lens not perfected since reversal.

March 11, 7:30–10:00 P.M. All four round. No change. Seeing, 4.

March 13, 8:30– 9:10 P.M. II, III and IV in moments of best seeing; round.

March 19, 8:00–10:10 P.M. All four round; no changes.

March 22, 8:00– 9:00 P.M. Through clouds. In best seeing all four round.

March 24, 7:30– 8:40 P.M. Tendency to elongation of all, but round in moments of best seeing. Seeing, 2–3.

[1] Communicated by Edward C. Pickering, Director of Harvard College Observatory.

March 27, 9:00–9:45 P.M. Seeing poor; 2–3. In best seeing, round. II and III close together. Occasional apparent distortion of form shared perfectly by both.

April 13, 7:00–9:45 P.M. All round. Seeing, 2–3.

April 14, 7:00–8:30 P.M. I, II, III and IV round in best seeing.

Consecutive observations for a larger number of hours during any one night were prevented by the clouds which are prevalent during these months.

In nearly all cases my own observations were confirmed by either Mr. H. C. Bailey or Mr. W. B. Clymer, assistants in this Observatory, and sometimes by both.

The results of our observations may be summed up as follows:

Under the best conditions, *i. e.*, with the instrument in perfect adjustment and good seeing, 3–5 on a scale of 1–5, II, III and IV were always seen round. I was twice seen having an apparent elongation in the same direction as Jupiter. In both cases the satellite was near the planet. On the second occasion, January 25, I, when off the disk but near Jupiter, appeared elongated, but an hour later, plainly seen on disk of Jupiter appeared perfectly round. On the other hand the shadows of I and III, on other nights were seen elongated.

Several occultations and transits were observed, but the limb of Jupiter was not seen, when, to me, it gave any indication of transparency.

The power usually employed was 800, but frequently higher and lower powers were also used. The conditions were not considered suitable for work of value, unless the image of a star in focus presented a central circular disk and sharply defined concentric diffraction rings. Under such conditions the components of close doubles, such as Bu 220, could be easily and distinctly separated.

During the hours given above we failed to detect any systematic change of form in any of the satellites. These observations, scattered through the cloudy season, may not be the best possible, for the same observers and instrument, in Arequipa;

nevertheless, it does not seem to me probable that any frequent periodic recurrence of an ellipticity, approximating in amount that of Jupiter itself, would have escaped detection.

Although the above observations were the only ones regarded of special value, it may not be out of place to refer to certain difficulties incidentally met. The thirteen-inch refractor is used for both visual and photographic work. To change from one class to the other it is necessary to remove the lenses and reverse the crown glass. After the use of the lenses for photographic work it is impossible to immediately replace them in perfect position for visual work. The final adjustments require a certain time. When the adjustment is very close, but not perfect, the image of a bright star in focus presents no sensible wings, but the image, when just out of focus, is slightly irregular in form. Under such circumstances I have noticed that if the seeing is good and the images exactly in focus, the disks of the satellites appear round, *i. e.*, are unaffected in form by the slight lack of adjustment,— but, that, with poor seeing or with the images a little out of focus, there is a slight elongation in the same direction as that of the out-of-focus stellar image. The tiring of the eye would, perhaps, have the same effect as a slight change of focus at the eyepiece. When the altitude of the object observed was very low, both in double star and satellite observations, an elongation has been sometimes noticed similar to that caused by lack of adjustment, and perhaps for the same cause. In all such cases, however, the elongation, when present, was shared by all the satellites in common.

AREQUIPA, May 1, 1895.

NOTE ON THE MAGNESIUM BAND AT λ 5007.

By H. CREW AND O. H. BASQUIN.

THE interest which a few years ago attached to this feature of the magnesium spectrum has very much abated since Keeler has shown that the normal position of the chief nebular line differs from that of the first edge of the "fluting" by something like half a tenth-meter. At the same time, the prominence of this metal in stellar spectra, and the possible use of its spectrum as a criterion of stellar temperatures make it worthy of study.

Having occasion recently to photograph this part of the magnesium arc spectrum, it was observed, on a preliminary visual examination, that this fluting was made up—the first and second bands at least—of fine lines. Later the fluting was photographed so as to plainly show a linear structure in the third, fourth, fifth and sixth bands also. These lines in the third and following bands are distributed with approximate uniformity at intervals of about half an Ångström unit. They are not, therefore, at all difficult to see or to photograph in the spectroscope which we are using, *viz.*, a Rowland concave grating of ten feet focus—14438 lines to the inch.

At the same time, we have not been able to find, in the literature available, any reference to this fluting having been thus resolved. It seemed, therefore, worth while to measure the wave-lengths of those lines which we could photograph, hoping that some simple law might be found to govern their distribution.

Two sources of light were used, *viz.*, a rotating metallic arc, employing from ten to twenty amperes, and magnesium tape burning in air. It is well known that the fluting is very much stronger (compared with other magnesium lines) in the flame than in the arc. The flame is, therefore, better adapted to the photography of the fluting; while the arc is vastly more convenient for visual work. It is not difficult, however, using the arc, to

photograph the band in the second order provided one cuts out the triplet at λ 3336 with an absorbent in front of the slit, and uses Seed's "double coated" plates.

The following measures are from second-order photographs, the constant being determined from the iron spectrum taken on the same plate. The wave-length of the first head is taken from Rowland's list of standards (*Phil. Mag.* July, 1893), and all the other lines are referred to it. We have assumed, without knowledge, that Rowland's value applies to the maximum of this head rather than to its somewhat uncertain edge. It is thought that, except in the case of two or three very weak lines, the following values are correct to within less than one-tenth of an Ångström unit. The scale of intensities is that of Rowland, as nearly as possible:

Wave-length	Intensity	Remarks	Wave-length	Intensity	Remarks
5007.61		Red edge of first head	4980.11	1	
(5007.473)	6	Maximum of first head	4979.68	1	
4997.03		Red edge of second head	4979.18	1	
4996.92	6	Maximum of second head	4978.73	0	Very weak and hazy
4988.38	1	Five lines immediately preceding third head	4978.07	0	
4988.00	1		4977.70	1	
4987.62	1		4977.23	1	
4987.17	1		4976.75	1	Hazy
4986.77	1		4976.17	1	Hazy
4986.38		Red edge of third head	4975.63	2	
4986.26	6	Maximum of third head	4975.15	2	
4986.02	1		4974.94		Red edge of fourth head
4985.57	1	Wide and hazy	4974.75	5	Maximum of fourth head
4985.11	1		4974.24	1	
4984.68	1		4973.67	0	Rather weak
4984.29	1		4972.98	0	Wide and hazy
4983.72	1		4972.53	2	Group of four quite distinct lines
4983.36	1		4972.04	2	
4982.93	1	Rather hazy	4971.49	2	
4982.43	1	Hazy	4971.00	2	
4981.99	1		4970.44	0	Weak and difficult to measure
4981.55	1				
4981.13	1		4969.79	0	Weak and difficult to measure
4980.56	1				

Wave-length	Intensity	Remarks	Wave-length	Intensity	Remarks
4969.19	2	Group of five distinct lines	4959.09	2	
4968.74	2		4958.48	2	
4968.13	2		4957.91	2	
4967.60	2		4957.48	1	
4967.12	2				Two lines omitted here: too weak to measure
4966.67	0	Wide and hazy			
4966.24	0	Wide and hazy			
4965.83	1		4955.87	0	
4965.13	2		4955.40	0	
4964.60	2		4954.93	0	
4964.10	2		4954.41	1	
4963.50	1	Wide and hazy	4953.82	1	
4962.85	3	Fifth head	4953.17	2	
4962.35	2		4952.62	1	
4961.84	2		4951.93	00	Wide and hazy
4961.37	2		4949.5(?)	0	Sixth head (?)
4960.88	1	Wide			Some twenty weak lines omitted here
4960.35	2				
4959.72	0	Wide and hazy	4935.17	2	Seventh head (?)

It will be seen from the above table that the distance between consecutive lines tends to increase, as one recedes from the head, very much after the manner of the lines in a carbon band.

In the following table are grouped the wave-lengths of the various heads. The value for the sixth is uncertain on account of its weakness, and on account of companion lines quite as strong as itself. The seventh is comparatively strong, but may represent an individual magnesium line instead of a "head," or it may be an impurity:

Head	Wave-length	Difference
First,	(5007.473)	10.55
Second,	4996.92	10.66
Third,	4986.26	11.51
Fourth,	4974.75	11.90
Fifth,	4962.85	13.40
Sixth,	4949.50	14.30
Seventh,	4935.17	

NORTHWESTERN UNIVERSITY,
Evanston, Ill., June 10, 1895.

PLATE VII

A CARBON-CYANOGEN SPECTRUM PLATE

(a) CO_2 in Mg arc, atmosphere CO_2
(b) CO_2 in Mg arc, atmosphere air and CO_2
(c) CO_2 in Mg arc, atmosphere CO_2

NOTE ON THE SPECTRUM OF CARBON.

By H. CREW AND O. H. BASQUIN.

SINCE the year 1889, it has been customary to assign the three carbon bands at λ 4216, λ 3883 and λ 3590 to cyanogen. The most conclusive evidence for this view was furnished by Kayser and Runge in their well-known paper. (*Wied. Ann.* 38, 80–90, 1889.) The surprise which these investigators felt, and frankly expressed, at their own results has doubtless been shared by each of their readers. The fact that a compound of carbon and nitrogen not only persists but actually forms at the temperature of the carbon arc is sufficiently surprising in itself; but when the same compound, or at least the same group of lines, is found in the solar spectrum, the fact is truly astonishing. Indeed, these results are so much at variance with the ordinary facts of dissociation at high temperatures that some have fairly hesitated to accept the view of Kayser and Runge.

It has seemed to us, therefore, that the following somewhat independent evidence for the existence of cyanogen in the carbon arc might not be without interest. It occurred to us that *if the spectrum of carbon could be obtained by the introduction of carbonic acid gas into a metallic arc*, that then nitrogen might be easily and thoroughly mixed with the CO_2 and its effect determined at once.

The experiment was tried as follows: A rotating arc (described in *Phil. Mag.* October, 1894) was fitted with "chemically pure" magnesium poles. The fixed electrode had a hole drilled through it lengthwise, so that the gas could be introduced at one end while the arc was formed at the other. The whole was then enclosed in an air-tight metal box cast in two pieces and screwed together with wide flanges. This metallic hood was fitted with three stopcocks. Through one of these the CO_2 could be led into the fixed electrode and thence directly into the middle of the arc; through a second, the gas could be introduced into the hood as an atmosphere surrounding the arc;

the third was used as an escape pipe. The gas was supplied from an iron drum of liquid CO_2.

As to results, it may be stated first of all that this proved to be a convenient method of producing a very pure carbon spectrum. Copper, tin, and some other metals were tried, and found to behave very much as magnesium, that is they all act, apparently, as reducing agents, furnishing free carbon at the poles. Iron, however, acts very feebly as compared with magnesium.

In order to observe both carbon and cyanogen bands under identical conditions, a photographic plate was so placed as to include both λ 4216 and λ 4737 in the second order of a concave grating of ten feet radius.

A stream of CO_2 was introduced into the hood surrounding the arc, thus displacing the air; and the spectrum of the arc was then photographed. *The band at λ 4737 came out very distinctly, while that at λ 4216 was scarcely visible.*

By means of a footbellows a current of air, in addition to the CO_2, was next introduced into the hood, but not immediately into the center of the arc, and the spectrum again photographed on an adjoining portion of the same plate, no circumstance having been changed except by the introduction of the air.

The effect of the air was to multiply many fold the intensity of the band at λ 4216, while that at λ 4737 was very much weakened. But the change in the band at λ 4737 was not nearly so marked as that at λ 4216. To insure the constancy of all conditions except that of the atmosphere surrounding the arc, a third photograph was taken after the current of air had been shut off for a few seconds, the CO_2 still running. In this interval of time, the stream of CO_2 had sufficiently cleared the hood of air to cause the band at λ 4216 to disappear, the first and third photographs being identical.

The bands at λ 3590 and λ 3883 were found to behave exactly as that at λ 4216. The bands λ 5165 and λ 5635 were examined visually. While the CO_2 was streaming through the hood, the observer at the eyepiece, by means of a rubber tube, blew a current of air from his lungs either into the hood or into the arc.

The effect was to diminish the intensity of the bands at λ 5165 and λ 5635 in the most striking manner; indeed, they practically disappeared the instant the air was introduced. The same is true when dry (?) air is introduced by the bellows. At first glance one might think that the effect of this air was merely mechanical, sweeping away the CO_2 from the arc; but on looking at the band at λ 4216 one sees it very bright, showing that there is plenty of carbon at the poles. The band at λ 4382 is more difficult to observe; but the photographs show that it, too, is carbon, and not cyanogen.

By means of this hooded arc and magnesium poles, we have succeeded in getting some very distinct photographs of the cyanogen band at λ 4606.

As this band is mentioned, but not measured, by Kayser and Runge, we have determined the wave-lengths of the various heads. We think the values of the following table may be found in error at any point by, perhaps, one twentieth of an Ångström unit.

The scale of each plate was determined from iron lines found in Rowland's table of standards.

All the following values are referred to his value for the very sharp blue magnesium line λ 4571.281:

Head	Wave-length	Difference
First,	4606.33	
		28.14
Second,	4578.19	
		24.88
Third,	4553.31	
		21.25
Fourth,	4532.06	
		17.11
Fifth,	4514.95	
		12.60
Sixth (?)	4502.35 (?)	

The band at λ 3300 we have not succeeded in finding. The result of this experiment is then to confirm, at every point, the work of Kayser and Runge.

NORTHWESTERN UNIVERSITY,
Evanston, Ill., June 10, 1895.

THE MEASUREMENT OF SOME STANDARD WAVE-LENGTHS IN THE INFRA-RED SPECTRA OF THE ELEMENTS. II.

By EXUM PERCIVAL LEWIS.

SINCE the writing of the article on this subject which appeared in THE ASTROPHYSICAL JOURNAL for June, investigations of the infra-red spectra of calcium, strontium, and thallium have been carried on with the radiomicrometer. The results are given below:

CALCIUM.

8541.48	8661.38
8541.55	8661.49
8542.92	8662.82
8542.28	8662.63
8541.10	8661.47
8541.9	8662.0

H. Becquerel observed a band of calcium lines between wave-lengths 8580 and 8760. A thorough search was made of this region, without detecting any evidence of other lines.

These lines are probably coincident with those given in Abney's table of the solar spectrum as 8541.8 and 8661.4.

STRONTIUM.

I	II
10325.72	10326.00
10326.66	10327.21
10326.91	10327.35
10326.79	10327.46
10327.30	10327.71
10326.93	10326.11
10326.72	10326.97

Average, 10326.8

I	II
10914.20	10915.70
10916.95	10914.35
10914.77	10915.13
10917.56	10915.27
10915.82	10915.40
10916.07	10915.66
10915.89	10915.25

Average, 10915.6

Becquerel gives the wave-lengths 10340 and 10980 for these lines.

THALLIUM.

11510.39
11512.66
11512.38
11511.66
11511.51

11511.7

This line was very diffuse, covering a space of about 10 Ångström units. The above result may, therefore, be in error by several Ångström units. Becquerel gives 11500 as its wave-length.

Below is a summary of the results so far obtained in this investigation, with a comparison of the intensities of the lines,

Element	Wave-length	Intensity
Ca	7663.7	30
Ag	7688.4	25
Li	8126.3	40
Na	8183.7	60
Na	8194.2	60
Ag	8274.0	25
Ca	8541.9	50
Ca	8662.0	50
Sr	10326.8	40
Sr	10915.6	45
Na	11381.1	35
Na	11403.9	35
Th	11511.7	40

the intensity of the D lines being taken as 60. On account of irregularities of the arc due to the impossibility of maintaining a uniform supply of the salt, these intensities must be considered as only approximately correct.

Unsuccessful search was made for the lines which appear in Becquerel's list as follows:

Potassium,	10980, 11620, 12330.
Strontium,	8700, 9610, 10030.
Magnesium,	8990, 10470.
Lead,	10598, 10870, 11330, 12210, 12290.

Lines predicted as follows by Kayser and Runge were not found:

Mercury,	9497.
Magnesium,	13007, 13041, 13111.
Calcium,	11801, 11874, 12020.
Strontium,	13022, 13345, 14086.

JOHNS HOPKINS UNIVERSITY,
June, 1895.

PRELIMINARY TABLE OF SOLAR SPECTRUM WAVE-LENGTHS. VII.

By HENRY A. ROWLAND.

Wave-length	Substance	Intensity and Character	Wave-length	Substance	Intensity and Character
4903.896		0000	4913.980		000 N
4904.350		000	4914.150		2
4904.597		3	4914.401		0000
4905.009		0000	4914.583		0000
4905.310	Fe?	0	4914.702		0000
4905.981		000 N d?	4915.414	Ti	000
4906.316		000	4915.952		0000
4906.578		0000	4916.026		0000
4906.885		0000	4916.426		000
4906.952	Cr	000	4916.660		00
4907.232		0000 N	4916.852		0000
4907.494		0000	4917.028		0000
4907.681		0000	4917.134		0000
4907.918	Fe	2	4917.410	Fe	2
4908.209		0 N	4917.529		0000
4908.450		0000	4918.004		000
4908.673		000	4918.190	Fe	1
4908.784		000	4918.349		0000
4909.012		0000	4918.543	Ni	2
4909.283		000	4918.886	Ni	0
4909.377		0000	4919.174 s	Fe	6
4909.566	Fe	2	4919.482		0000
4909.888		000	4919.624		000
4910.198	Fe	3	4919.923		000
4910.505	Fe	2	4920.047		00
4910.753	Fe	2	4920.241		0000
4910.952		000 N	4920.474		0000
4911.205		000	4920.685 s	Fe	10
4911.374		1	4920.862		000
4911.568		000	4921.147	La	0
4911.717		0	4921.344		0000
4911.963	Fe	1	4921.577		0000
4912.199	Ni	1	4921.774		0000
4912.362		0000	4921.963	La Ti	1
4912.666		000	4922.164		0000
4912.964		0000	4922.336	Ni	000
4913.157		000	4922.446	Cr	2
4913.311		00	4922.665		0000
4913.450		0000	4922.842		0000
4913.803	Ti	2	4922.995		000

Wave-length	Substance	Intensity and Character	Wave-length	Substance	Intensity and Character
4923.155		0000	4938.150		0000
4923.329	Fe?	00	4938.350	Fe	2
4923.540		000 d	4938.467		000
4923.813		0000 d	4938.997	Fe	4
4924.107 s	Fe	5	4939.416	Fe	2
4924.299		0000	4939.654		0000
4924.478		00	4939.868	Fe	3
4924.764		000	4939.998		0000
4924.956 s	Fe	3	4940.152		0000
4925.140		0000	4940.257		000
4925.261		0000	4940.669		000
4925.450	Fe	00	4940.885		0000Nd?
4925.594		000	4941.132		0000
4925.746	Ni	1	4941.391		0000
4926.334		000	4941.496		0000
4926.577		0000 N	4941.752		0000
4926.873		000	4942.002		0000
4927.022		000	4942.083		0000
4927.123		0000	4942.660	Cr	2
4927.447		000	4942.774		000
4927.601	Fe	1	4943.480		0000
4927.650		0000	4943.623		0000
4927.842		0000 N d?	4944.087		0000
4928.050	Fe	2	4944.467		00
4928.297		0000 d	4944.751		000
4928.511	Ti	0	4945.457		0000
4930.241		000	4945.622	Ni	1
4930.486	Fe	2	4945.814	Fe	1
4930.655		0000	4946.215	Ni	0
4930.977	Ni	00	4946.344		0000
4931.296		000	4946.568	Fe	3
4931.911		0000	4947.778		00
4932.194		000	4948.120		0000
4932.246	Ni	0	4948.368		000
4933.367		0	4948.520		000
4933.514	Fe	2	4948.773		0000 N
4933.847		000 N d?	4949.753		0000
4934.054	Fe	0	4950.291	Fe	2
4934.214 } s	Ba	3	4950.555		0000 N
4934.277 }		4	4950.801		0000 N
4935.048		0000	4951.606		000
4935.595		000	4952.461	Fe	1
4935.827		0000	4952.635		0000
4936.015	Ni	2	4952.823	Fe	2
4936.512	Cr	1	4953.015		0000 N
4936.876		0000	4953.197		0000 N
4937.245		00	4953.392	Ni	2
4937.524	Ni?	3	4953.612		0000 N
4937.705		0000	4953.907		000 N
4937.902	Ti	000	4954.179		0000

Wave-length	Substance	Intensity and Character	Wave-length	Substance	Intensity and Character
4954.472		0000	4971.531	Ni-	1
4954.782	Fe	1	4972.096		0000 N
4954.986	Cr	2	4972.357		0000
4956.152		000	4972.572		0000
4956.922		0000	4972.832		0000 N
4957.480 s	Fe	5	4973.088		0000
4957.650		0000	4973.281 s	Ti-Fe	4
4957.785 s	Fe	8	4973.533		0000
4957.878		000	4973.827		0000
4958.207		0000	4974.431		000
4958.431	Ti	00	4974.537		0000
4959.320		0000	4974.642		0000
4959.381		00	4974.728		0000
4960.526		0000	4975.530	Ti	00
4961.039		0000	4975.588	Fe	00
4961.235		00	4975.729		0000
4961.564		0000	4976.314	Ni	0
4962.095		0	4976.508	Ni	1
4962.298		0000	4976.671		0000
4962.467	Sr?	000	4976.868		000
4962.751	Fe	2	4977.056		0000
4962.905		0000	4977.833	Fe	0
4963.087		0000	4977.891		0000
4963.245		0000	4978.104		0000 N
4963.725		0000	4978.289		000
4964.312		000	4978.372	Ti	00
4964.903	Ti	000	4978.544		0000
4965.107	Cr	1	4978.732 } s		0
4665.351	Ni	0	4978.785 }	Fe	3
4965.580		0000	4978.863		0000
4965.986		0000	4979.112		0000
4966.036	Mn	00	4979.232		0000
4966.270	Fe	4	4979.391		000
4966.460		000	4979.485		0000
4966.761		0000	4979.767	Fe	00
4966.979		0000	4979.885		0000
4967.449		0000	4980.012		0000
4967.571		0000	4980.143		0000
4967.700	Ni	00	4980.352 s	Ni-	4
4967.859		0000	4980.477		000
4968.080	Fe	3	4980.723		000
4968.569		00	4981.453		0000
4968.769	Ti	0	4981.550		000
4968.880	Fe	1	4981.912 s	Ti	4
4969.028		0000	4982.319		000
4970.098	Fe	3	4982.682	Fe	4
4970.291		0000	4982.994		2
4970.382		0000	4983.205		0000
4970.671	Fe	1	4983.433	Fe	3
4970.829		0	4983.644		0000

Wave-length	Substance	Intensity and Character	Wave-length	Substance	Intensity and Character
4983.777		0000	4998.742		0000
4984.028	Fe	3	4999.141		0000
4984.297	Ni	2	4999.297	Fe	0
4984.476		0000	4999.439		0000
4984.632		0000	4999.689 s	Ti, La	3
4984.806		00	5000.388		000
4985.432	Fe	3	5000.526	Ni-	2
4985.730	Fe	3	5000.721		0000
4985.941		0000	5000.917		000
4986.165	Cr	00	5001.165	Ti	0
4986.403	Fe	1	5001.387		0000
4987.088		00	5001.654		000
4987.260		0000	5002.044	Fe	5
4987.452		0000	5002.510		0000
4987.610		0000	5002.771		0000
4987.827		0000	5002.976	Fe	2
4988.030		0000	5003.924	Ni	0
4988.313		000	5004.056		0000
4988.535		0000	5004.226	Fe	0
4989.130	Fe	2	5004.393		0000
4989.325	Ti	00	5004.547	Cr	000 d
4989.730		0000	5005.068		00
4990.147		000	5005.347	Mn	0
4990.625	Fe	0	5005.581		000
4991.247	Ti	3	5005.675	Pb?	0000
4991.452	Fe, La	2	5005.896 s	Fe	4
4992.036		00	5006.306 s	Fe	5
4992.252		0000 N	5006.556		000
4992.461		000	5006.709		000
4992.657		0000	5006.870		000
4992.962		000	5007.398 } s	Ti	3
4993.173		0000	5007.461 }	Fe	2
4993.531		0	5007.912		00
4993.699		0000	5008.217		0000
4993.864	Fe	0	5008.409		0000
4993.926		000	5008.632		0000
4994.114		0000	5008.825		000
4994.316 s	Fe	3	5009.370		0000
4995.208		0000 N d?	5009.604		000
4995.586		00	5009.829	Ti, Co	00
4995.835		00	5010.006		0000 d?
4996.050		0000	5010.199	Ni	0
4996.375		0000	5010.396		00
4996.558		000	5010.506		000
4996.812		0000	5011.119	Ni	0
4997.024	Ni	1	5011.384		000
4997.161		0000	5012.252	Fe	4
4997.283	Ti	0	5012.335		1
4998.139		000 N	5012.490		0000
4998.408	Ni	1	5012.625	Ni	1

Wave-length	Substance	Intensity and Character	Wave-length	Substance	Intensity and Character
5012.773		0000	5024.403		000
5012.875		0	5025.027	Ti	3
5013.479	Cr, Ti	2	5025.256	Ni	00
5013.644		0000	5025.482		00
5013.871	Ti	0	5025.749	Ti	1
5013.953		0000	5025.938		000
5014.100		00	5026.086		0000
5014.236		000	5026.670		0000
5014.369 } s	Ti	2	5027.305	Fe	3
5014.457 }	Fe	3	5027.406		00
5015.123	Fe	3	5027.531		000
5015.304		0000	5027.707		0000
5015.476		000	5027.798		0000
5016.220		000	5027.939	Fe	1
5016.340	Ti	2	5028.101		0000
5016.504		0000	5028.308	Fe	2
5016.659		00	5028.537		000
5016.864		0000	5028.719		0000
5017.060	Fe	0	5029.660		0000
5017.228		0000	5029.805	Fe	1
5017.370		0000	5029.994		000
5017.562		0000	5030.096		0000
5017.762	Ni	3	5030.218		0000
5017.997		000	5030.817		000
5018.210		0000 N	5030.960		00
5018.463	Ni	1	5031.058		0000
5018.629	Fe	4	5031.199		3
5019.059		0000 N	5031.361		000
5019 364		000	5031.939		0000
5019.664		0000	5032.092		00
5019.912		00	5032.252		0000
5020.208 s	Ti	2	5032.560		000 N
5020.675		000	5032.912	Ni	00
5020.873		0000	5033.305		0000 N
5020.998		00	5033.714		000
5021.177		000	5033.835		000
5021.328		0000	5033.960		000
5021.778	Fe	0	5034.354		000
5021.869		000	5034.530		0000
5022.108	Cr	000	5035.542	Ni	5
5022.240		0000	5035.846		000 Nd?
5022.414	Fe	3	5036.089 } s	Ti	3
5023.052	Ti	2	5036.155 }	Ni	2
5023.221		0000	5036.332		0000
5023.372	Fe	0	5036.449	Fe	0
5023.531		0000	5036.645	Ti	2
5023.674	Fe	0	5036.909		0000Nd?
5023.819		0000	5037.105	Fe	00
5024.010		000	5037.375		0000
5024.190		0000	5037.496		0000

Wave-length	Substance	Intensity and Character	Wave-length	Substance	Intensity and Character
5037.669		0000	5049.769		0000
5037.885		000	5049.860		0000
5037.983		000	5050.008 s	Fe	6
5038.579	Ti	2	5050.316		000
5038.774	Ni?	2	5050.626		000
5038.974		0000	5050.751		0000
5039.065		000	5050.919		000
5039.239		000	5051.145		00
5039.428	Fe	3	5051.488		000 N
5039.542	Ni	00	5051.683	Ni	1
5039.683		0000	5051.825	Fe	4
5039.951		000	5052.084	Cr	0
5040.138	Ti	3	5052.338		0 N
5040.300		0000	5052.803		00
5040.422		000	5052.917		0000
5040.644		0000	5053.056	Ti	0
5040.787	Ti	00	5053.170		00
5040.908		0000	5053.301		0000
5041.069	Fe	3 d?	5053.477		000
5041.255	Fe	4	5053.756		00 N
5041.499	Ti	00	5054.261		000
5041.633		00	5054.821	Fe	1
5041.795 s	Ca	2	5055.762		000
5041.936	Fe	4	5055.975		0000
5042.033	Ni	00	5056.169	Fe	00
5042.200		0000	5056.307		000
5042.367	Ni	1	5056.428		000
5043.475		000	5056.617		000
5043.761	Ti	00	5057.021	Fe	1
5043.885		0000	5057.665	Fe, Ni	0
5044.011		0000	5057.875		0000
5044.212		000	5058.017		000
5044.394	Ni, Co-Fe	3	5058.167	Fe	1
5044.945		0000 N	5058.421		000 N
5045.454		00	5058.674	Fe	00
5045.582	Ti	00	5058.989		0000
5046.379		000 N	5059.110		0000
5047.107		000	5059.409		000
5047.301		000	5059.575		0000
5047.483		000 d	5059.964	Co	00
5047.726		0000	5060.111		0000
5047.898		0000	5060.258 s	Fe	3
5048.120		00	5060.476		0000
5048.242	Ni	0	5061.575		000
5048.409		00 N d	5061.703		000
5048.612	Fe	3	5061.882		00
5049.035	Ni-	2	5062.066		000 N
5049.192		0000	5062.285	Ti	0
5049.384		0000	5062.530		0000
5049.607		0000	5063.355		00

Wave-length	Substance	Intensity and Character	Wave-length	Substance	Intensity and Character
5063.479		000	5074.932	Fe	5
5063.699		0000	5075.154		0000
5063.927		0000	5075.341		0000
5064.058		0000	5075.480	Ti	00
5064.244	Ti	00	5075.716		0000
5064.557		0000 N	5075.989		0000
5064.836 s	Ti	3	5076.277		000
5064.989		0000	5076.450	Fe	3
5065.152		1	5076.504		000
5065.207	Fe	3	5076.666		0000
5065.380	Fe	2	5076.807	Ti	00
5065.556		0000	5076.950		000
5065.890		0000	5077.562		000
5066.078	Cr	000	5077.780		0000
5066.174	Ti	000	5078.013		0000 d
5066.446		0000	5078.246		000
5066.545		0000	5078.541		000
5066.908		00	5078.719		0000
5067.039		000	5078.891		0000
5067.336	Fe	3	5079.158	Fe	3
5067.679		000 N	5079.409	Fe	4
5067.874	Cr	0	5079.732		0000
5067.954	Co	000	5079.921	Fe	4
5068.485	Cr, Ti	0000	5080.144	Ni	1
5068.944 s	Fe	5	5080.288		0000
5069.267		000	5080.505		00
5069.592	Ti	000 d	5080.714	Ni	4
5069.802		0000	5080.966		0000
5069.971		0000	5081.111		0000
5070.165		00	5081.286	Ni	3
5070.313		000	5081.534		0000 N
5070.471		0000	5081.764		000
5070.615		0000	5081.942		000
5071.098		000	5082.019		000
5071.311		000	5082.231		0000
5071.435		0000	5082.363		0000
5071.666	Ti	0	5082.526	Ni	2
5071.969		000 N	5082.829		0000
5072.032		0000	5083.071		0000
5072.257	Fe	3	5083.205		000 Nd?
5072.479	Ti	0	5083.365		0000
5072.650		0000	5083.518 s	Fe	4
5072.849	Fe	2	5083.709		0000
5073.114	Cr	1	5083.877		000
5073.348		0000	5084.038		000
5073.637	Ti	00	5084.279	Ni	3
5073.776		0000	5084.590		0000
5073.924		000	5084.734		000
5074.244		0000 N	5084.876		000
5074.521		000	5085.017		000

Wave-length	Substance	Intensity and Character	Wave-length	Substance	Intensity and Character
5085.179		0000	5096.215		0000
5085.341	Ti	0000	5096.357		000
5085.513		000	5096.660		0000
5085.668		0	5096.762		0000
5085.856		000	5096.908		000
5086.078	Cd?	0000 N	5097.038 } s	Ni	0
5086.422		00	5097.175 }	Fe	3
5086.570		000	5097.489		000
5086.794		0000	5097.668		0
5086.947		000	5097.884		0000
5087.104		0000	5098.046		0000
5087.239	Ti	0	5098.302		00 N
5087.432		0000	5098.492		000 N
5087.601	Y?	1	5098.751	Fe	1
5088.019		0000 N	5098.885	Fe	3
5088.175		000	5099.104		0000 N
5088.331		0	5099.251	Fe	0
5088.719	Ni	0	5099.497	Ni	1
5088.929		0000	5099.744		0000 N
5089.134	Ni	0	5099.957		000
5089.387		000 N d?	5100.108	Ni	2
5089.541		0000	5100.413		0000
5090.004		0000	5100.636		0000
5090.236		0000 N	5100.827		00
5090.391		000	5101.028		000
5090.569		0000	5101.108		000
5090.954 s	Fe	5	5101.251		000
5091.146	Cr	0000	5101.445		0000
5091.353		0000	5101.655		000
5091.477		0000	5101.790		0000
5091.662		0000	5101.994		0000
5091.896		000	5102.184		0000
5092.058		00	5102.410		0000
5092.285		0000	5102.599		000
5092.483		00	5102.843		0000
5092.665		0000	5103.142	Ni	1
5092.977		000	5103.297		0000
5093.220		0000	5103.567		000
5093.513		0000	5103.721		0000
5093.623		0000	5103.909		000
5093.858		0000 N	5104.083		0000
5094.199		000 N	5104.204	Fe	0
5094.594	Ni	0	5104.366		0
5094.789		0000	5104.614		0
5095.117		00	5104.817		0000
5095.348		00 d?	5105.066		000
5095.512		00	5105.260		0000
5095.679		0000	5105.356		0000
5095.840		0000	5105.536		000
5096.031		000	5105.718 s	Fe	4

Wave-length	Substance	Intensity and Character	Wave-length	Substance	Intensity and Character
5105.918		0000	5117.071		000
5106.183		0000 N	5117.334		0000
5106.407		0000	5117.933		0000
5106.556		0000	5118.112	Mn	00
5106.623		000	5118.241		0000
5106.773		000	5118.352		0000
5107.047		0000	5118.529		0000
5107.619	Fe	4	5118.987		000 Nd?
5107.823	Fe	4	5119.292		00
5108.056		000	5119.368		0000
5108.149		0000	5119.555		000
5108.359		000	5119.820		0000
5108.563		00	5119.942		0000
5108.805		0000	5120.084		0000
5109.083		0000	5120.276		0000
5109.291		000 d?	5120.516		000
5109.475		0000	5120.592	Ti	0
5109.601	Ti	0000	5120.802		000
5109.827 s	Fe	2	5120.893		0000
5110.188		0000	5121.056		0000
5110.574 s	Fe	5 d	5121.197		0000
5110.938	Cr	00	5121.399		0000
5111.138		0000	5121.609		0000
5111.426		0000	5121.732 } s	Ni	0
5111.539		000	5121.825 } s	Fe	2
5111.802		000	5122.156		0000
5111.912		0000	5122.299	Cr	000
5112.049		000	5122.481		0000
5112.458		000	5122.613		00c0
5112.663		0000	5122.968	Co	000
5112.817		0000 N	5123.178		000
5112.944		0000	5123.390	Y	0
5113.153		000	5123.458		0000
5113.298	Cr	00	5123.641	Cr	000
5113.424		0000	5123.899	Fe	3
5113.617	Ti	0	5124.219		000
5113.920		0000	5124.364		0000
5114.195		0000 N	5124.560		000
5114.431		000 N d?	5124.785		00
5114.683		000 N d?	5124.939		0000
5115.367		0000	5125.300	Fe	3
5115.566 s	Ni	2	5125.423	Ni	1
5115.843		0000	5125.645		0000
5115.961	Fe	0	5126.012		0000
5116.045		0000	5126.167		0000
5116.217		0000	5126.371 s	Fe-Co	2
5116.359		0000	5126.680		000
5116.643		0000	5126.856		000
5116.849		0000	5127.035		000
5116.944		000	5127.187		0000

Wave-length	Substance	Intensity and Character	Wave-length	Substance	Intensity and Character
5127.360		0000	5138.036		0000
5127.533 s	Fe, Ti	3	5138.130		0000
5127.858		00	5138.279		0000
5128.051		0000	5138.518		0000
5128.250		000	5138.690		0000
5128.382		0000	5138.890		000
5128.486		0000	5139.037		0000
5128.660		000	5139.189		0000
5128.807		0000	5139.427 s	Fe	4
5129.080		000	5139.644 s	Fe	4
5129.336	Ti?	3	5139.817	Cr	00
5129.546	Ni	2	5140.094		0000
5129.805	Fe	1	5140.336		0000
5129 990		0000	5140.553		0000
5130.110		0000	5140.992		00
5130.304		0000	5141.193	C?	0000
5130.543	Ni	00	5141.386	C,-	000
5130.757		000	5141.497		0000
5131.103		0000	5141.709		0000
5131.478		000	5141.918 s	Fe	3
5131.642	Fe	2	5142.074		0000
5131.771	C	0000	5142.279		0000
5131.942	Ni	1	5142.458		0000
5132.338		0000	5142.693	Fe	4 d?
5132.523		000	5142.958 s	Ni	2
5132.673		000	5143.111 s	Fe	3
5132.843		00	5143.288		0000
5133.118		000	5143.511		000
5133.209		0000	5143.764		000
5133.364		000	5143.901		00
5133.654		000	5144.031		0000
5133.870 s	Fe	4	5144.203		0000
5133.988	C	0000 N	5144.543		000 N
5134.505		0000	5144.758	C,-	000
5134.697		000	5144.847	Cr, C	00
5134.849		0000	5145.098		0000
5135.273		0000	5145.271	Fe	1
5135.355		0000	5145.403		0000
5135.752	C,-	000	5145.636	Ti	0
5135.880	C,-	000	5145.907		0000 N
5136.103		0000	5146.291	C,-	00
5136.270	Fe	00	5146.486		000
5136.443		000	5146.659 s	Ni-	3
5136.625		0000	5146.945	Co	000 d?
5136.835		0000	5147.273		000
5136.969		000	5147.458		0000 N
5137.250	Ni	3	5147.652	Ti	0
5137.558	Fe	3	5147.871	C,-	000
5137.753	C,-	000	5147.992	C,-	000
5137.864	C,-	000	5148.222	Fe	2

RÉSUMÉ OF SOLAR OBSERVATIONS MADE IN 1894 AT THE ASTROPHYSICAL OBSERVATORY OF CATANIA.

By A. MASCARI.

HONORED by Professor A. Riccò, Director of the Observatory of Catania, with the task of continuing his long and important series of solar observations made at Palermo from 1880 to 1890, and at Catania in 1891 and 1892, I have endeavored to follow his methods in order to render the new series in all respects comparable and homogeneous with the first.

The observations of the spots and faculæ are made with an equatorial telescope having a clear aperture of $0^m.33$. An image of the Sun $0^m.57$ in diameter is projected upon a screen, where the outlines of the spots are traced.

When the spots have been drawn and their positions determined the position angles of the various groups of faculæ visible near the Sun's limb are measured. These are classed according to their brightness as very faint, faint, bright, very bright. The number of these observations is always much inferior to that of spots, because they are made only when the conditions are very favorable. This is made necessary by the fact that the visibility and brightness of the faculæ are much affected by atmospheric conditions and by unsteadiness of the solar image.

The prominences are observed by means of a spectroscope with Rutherfurd grating attached to the same telescope. All elevations observed at the limb which have a height of not less than $30''$ are classed as prominences. Those of less height are classed as *jets* or as belonging to the chromosphere.

While these observations are being made the observing-room is kept in darkness by means of a curtain attached to the shutter of the dome, with the further protection of a large screen attached to the objective of the telescope. Thus the observer

and the screen on which the image is projected are shielded from all foreign light, and it becomes possible to distinguish the granulation of the photosphere without difficulty, to follow very frequently groups of faculæ to a distance of nearly one-third of a radius from the limb, and to detect such as occur in high heliographic latitudes and in the region of the poles.

The reduction to heliographic latitude of the position angles obtained for the faculæ and prominences is made rapidly and

TABLE I.

Day of month	January					February					March				
	Groups of spots and pores	Spots	Pores	Faculæ	Prominences	Groups of spots and pores	Spots	Pores	Faculæ	Prominences	Groups of spots and pores	Spots	Pores	Faculæ	Prominences
1	12	16	98	10	8	7	5	21	8	8	7	9	20	9	5
2	..	..	..	..	..	8	10	22	7	6	4	5	11	10	5
3	7	13	29	..	..	8	8	42	5	5	7	3	17	9	2
4	6	11	49	7	..	5	11	33	..	.	5	2	9	8	1
5	7	10	35	..	..	6	10	51	9	7	4	2	18	..	.
6	9	9	50	7	4	..	..	..	..	.	5	2	33	..	.
7	7	5	57	6	..	7	15	66	..	4	5	5	24	6	4
8	4	3	21	..	..	10	16	58	10	6	4	6	8	..	.
9	6	6	27	7	5	8	11	87	12	6	6	6	38	6	.
10	5	7	17	..	..	10	15	98	11	3	8	10	53	..	.
11	8	10	45	10	4	9	10	83	12	4	8	8	92	8	4
12	8	13	44	6	10	8	10	63	..	9	7	8	46	10	5
13	..	..	..	..	..	11	10	67	..	6	.	..	..	..	.
14	..	..	..	..	..	8	8	26	..	8	6	10	34	..	.
15	9	15	52	..	4	8	9	12	..	6	.	..	..	..	.
16	10	16	93	9	8	..	..	..	..	.	6	5	16	6	.
17	10	16	130	9	5	9	7	24	6	4	3	4	3	..	2
18	11	11	153	10	4	6	7	64	..	.	7	5	8	11	5
19	13	15	133	8	7	..	..	..	..	.	.	..	..	..	.
20	14	16	103	13	5	..	..	..	..	.	5	5	3	..	.
21	12	12	89	9	5	..	..	..	..	.	5	5	8	..	5
22	13	12	38	6	3	..	..	..	..	.	2	3	6	..	.
23	11	11	31	..	5	..	..	..	..	.	6	6	34	11	7
24	10	12	18	..	..	7	13	37	..	.	2	3	27	..	.
25	12	14	66	14	..	7	8	57	10	.	2	6	25	..	6
26	11	22	65	..	..	11	12	43	..	3	3	6	10	..	.
27	..	..	..	..	..	8	11	18	..	.	6	7	34	6	8
28	5	12	58	..	3	7	11	17	10	2	8	14	14	..	8
29	8	7	41	..	4	..	..	..	..	.	7	12	27	..	5
30	8	5	34	9	4	..	..	..	..	.	.	..	..	..	.
31	5	5	22	..	7	..	..	..	..	.	7	14	53	..	.

TABLE I. (*Continued.*)

Day of month	April					May					June				
	Groups of spots and pores	Spots	Pores	Faculæ	Prominences	Groups of spots and pores	Spots	Pores	Faculæ	Prominences	Groups of spots and pores	Spots	Pores	Faculæ	Prominences
1	6	12	56	.	4	..	..	..	..	.	7	11	45	5	0
2	.	..	..	.	.	8	13	22	..	.	10	10	44	..	3
3	7	12	69	7	2	9	14	56	..	4	9	10	37	10	1
4	7	13	16	.	.	8	16	42	..	2	10	13	45	..	1
5	9	14	45	.	.	8	11	83	..	3	11	13	38	..	2
6	6	19	16	.	.	7	9	55	7	2	..	..	..	..	..
7	6	16	55	.	5	7	12	58	9	1	..	..	..	..	..
8	5	11	45	.	4	..	..	..	..	.	..	..	..	..	..
9	.	..	..	.	.	7	12	54	8	.	8	20	66	..	..
10	5	11	25	.	4	6	10	33	8	4	8	17	47	..	3
11	3	7	20	4	4	6	9	24	11	3	9	19	79	7	5
12	.	..	..	9	.	7	11	31	..	4	8	17	96	..	7
13	4	9	33	.	9	5	13	33	..	.	..	..	..	..	..
14	3	10	26	.	3	6	16	54	8	4	10	17	82	3?	2
15	4	9	36	.	2	6	16	93	..	8	10	17	64	..	6
16	2	5	5	8	.	6	14	128	7	5	11	23	121	8	5
17	2	4	21	.	6	7	15	100	..	3	10	17	90	9	5
18	3	5	13	9	.	9	24	61	..	4	8	21	77	9	3
19	.	..	..	.	.	9	23	107	..	.	10	17	42	7	3
20	.	..	..	.	.	8	27	36	..	3	8	11	34	6	5
21	8	8	56	.	5	6	23	94	8	3	7	15	50	7	2
22	8	17	65	8	2	7	22	44	..	5	7	17	29	12	5
23	.	..	..	8	.	7	19	73	..	5	7	14	20	8	4
24	9	12	34	.	6	7	17	59	..	3	7	6	52	10	3
25	8	16	28	.	3	6	12	21	..	.	6	7	23	..	7
26	7	16	47	.	3	..	..	..	..	.	6	6	37	8	8
27	6	13	33	.	6	6	9	38	10	7	4	4	9	..	13
28	.	..	..	.	.	9	6	47	7	9	7	8	39	7	9
29	.	..	..	.	.	10	9	39	10	6	7	10	42	13	7
30	.	..	..	.	.	..	..	..	..	.	7	5	33	..	..
31	.	..	..	.	.	..	..	..	..	.	..	..	..	..	..

with a sufficient degree of approximation by means of the tables prepared by Professor Riccò.[1]

With these means the spots were observed in 1894 on 312 days, the faculæ on 173 and the prominences on 247. In Table I are given for each day of observation the total number of faculæ, of prominences and of groups of spots and pores, together with the number of spots and the number of pores of

[1] "Tavole per trovare prontamente la latitudine eliografica d'un punto del bordo solare di cui sia noto l'angolo di posizione."—*Mem. Spettr. Ital.* 10.

which these groups were composed. In Table II all the faculæ and prominences grouped by quarters are distributed in zones 10° wide in the northern and southern hemispheres. Table III gives the mean frequency of each of these phenomena.

During the year the Sun was seen free from spots (and with only a small number of pores) on one day and on three days no prominences were found. Faculæ were never absent.

The months which were richest in the various phenomena

TABLE I. (*Continued.*)

Day of month	July					August					September				
	Groups of spots and pores	Spots	Pores	Faculæ	Prominences	Groups of spots and pores	Spots	Pores	Faculæ	Prominences	Groups of spots and pores	Spots	Pores	Faculæ	Prominences
1	9	7	51	8	4	5	9	27	11	8	4	5	22	13	3
2	8	5	38	8	9	8	16	58	..	9	3	6	15	7	5
3	10	7	45	..	7	8	11	83	7	5	7	7	31	13	14
4	8	9	61	10	7	7	13	69	9	2	4	3	24	10	16
5	7	13	30	10	8	5	7	85	7	8	5	6	28	13	6
6	10	17	62	..	6	5	6	56	..	5	8	7	39	14	4
7	9	17	77	14	3	7	9	58	..	3	9	10	50	13	6
8	8	15	99	9	..	7	10	92	..	3	11	11	56	10	3
9	9	15	85	8	..	6	11	36	7	0	11	11	68	11	2
10	11	12	97	9	2	4	11	35	..	..	10	13	52	..	6
11	14	12	85	8	2	5	12	47	6	3	11	12	92	13	4
12	12	17	103	7	4	4	8	27	4	5	11	13	98	11	2
13	12	20	57	10	7	5	10	14	..	8	11	11	109	12	2
14	10	20	53	..	3	5	8	16	..	11	8	11	36	..	2
15	10	17	83	9	..	.	..	..	..	6	8	14	77	12	6
16	10	23	90	11	6	.	..	..	..	6	8	14	54	..	..
17	8	15	78	..	7	9	15	49	8	4	6	8	62	14	6
18	7	19	62	9	3	7	13	25	..	3	5	6	28	11	2
19	6	16	84	11	6	7	10	38	..	6	4	5	14	13	4
20	6	12	54	8	4	8	8	54	..	10	4	4	16	8	4
21	7	14	37	..	4	8	11	33	..	10	5	4	13	..	5
22	8	12	42	11	4	7	6	35	5	6	5	5	15	17	2
23	10	15	35	9	7	6	5	18	8	2	6	5	6	11	3
24	10	10	58	10	7	2	0	6	11	5	7	5	15	13	5
25	7	8	35	..	4	2	1	2	9	0	6	4	18	..	2
26	6	8	37	15	12	4	2	8	13	2	7	3	13	10	2
27	8	7	27	13	10	3	4	16	9	5	4	3	6	9	2
28	6	7	10	14	10	5	5	20	14	6	4	6	6	..	..
29	7	7	13	9	10	4	4	22	11	2	5	6	19	11	6
30	6	8	13	10	10	4	5	39	19	2	5	8	30	12	6
31	5	8	27	13	10	4	5	37	14	2	..	..	..	..	..

TABLE I. (*Continued.*)

Day of month	October					November					December				
	Groups of spots and pores	Spots	Pores	Faculæ	Prominences	Groups of spots and pores	Spots	Pores	Faculæ	Prominences	Groups of spots and pores	Spots	Pores	Faculæ	Prominences
1	4	9	25	11	.	5	5	20	..	.	.	..	..	..	.
2	.	..	..	..	.	5	5	26	12	5	.	..	..	..	.
3	7	15	38	..	.	4	5	10	..	3	.	..	..	..	.
4	6	16	46	9	3	5	8	14	6	3	8	23	56	..	3
5	5	15	27	..	.	7	5	48	12	3	8	23	109	14	3
6	.	..	..	..	.	8	9	45	..	3	7	17	64	..	.
7	6	22	61	..	3	5	12	47	11	3	.	..	..	..	.
8	6	26	104	..	5	7	11	45	13	7	7	13	59	14	7
9	7	25	49	..	1?	.	..	..	..	.	6	9	37	13	6
10	7	26	117	..	9	.	..	..	..	.	7	6	53	10	3
11	7	19	76	..	3	.	..	..	..	.	4	9	45	12	5
12	6	20	70	..	.	7	10	67	7	2	.	..	..	..	.
13	9	20	35	..	9	7	7	38	..	3	2	6	5	..	.
14	7	12	29	..	3	6	9	31	9	5	3	6	13	9	2
15	7	10	40	6	3	.	..	..	..	.	1	3?	0?	..	.
16	3	7	16	10	1	5	7	15	9	3	2	10?	1?	..	5
17	3	3	5	10	2	4	5	31	..	.	3	7	27	12	3
18	5	1	12	..	.	6	6	26	10	3	3	17?	10?	..	.
19	6	4	14	..	.	6	6	17	..	2	3	14	42	9	2
20	5	5	29	8	4	6	5	17	..	.	4	9	42	..	.
21	6	6	32	..	.	.	..	..	..	.	4	11	64	5?	.
22	7	8	43	..	.	6	9	33	11	3	.	..	..	..	.
23	6	9	34	11	2	5	8	13	..	.	5	12	39	..	7
24	5	4	46	..	.	6	13	32	..	8	5	11	28	..	4
25	7	5	40	..	.	5	10	30	..	4	7	9	14	..	.
26	6	4	34	·9	7	3	10	32	6	4	7	9	24	..	2
27	5	4	36	11	7	7	13	107	7	3	.	..	..	..	.
28	6	7	18	12	3	6	6	30	13	1	.	..	..	..	.
29	5	6	16	..	1	7	6	27	13	.	.	..	..	..	.
30	5	8	19	..	3	6	8	31	..	.	5	6	11	..	4
31	.	..	..	..	.	.	..	..	..	.	8	9	15	11	.

were May for spots and pores,[1] July for groups of spots and pores and for prominences, and September for faculæ.

The quarterly mean frequency shows a regular decrease after the first quarter for the groups of spots and pores, and after the second quarter for the pores. It is irregular for all the other phenomena.

In comparing the results obtained for the prominences and

[1] Pores are distinguished from spots by the fact that their area is less than $\frac{1}{1000}$ of the solar disk.

faculæ a discordance is seen in the different monthly means, but these irregularities partly disappear in the quarterly means, where the two phenomena exhibit the same inflections in the same quarters. If we consider their distribution in the two hemispheres we find, as was the case in 1893, that the prominences have been more numerous in the southern than in the northern hemisphere. The faculæ have shown the same tendency to greater frequency in the southern hemisphere, except in December. The difference has been less marked than for the prominences, but in the quarterly means the southern hemisphere invariably preponderates over the northern.

From a consideration of the distribution of the phenomena in 10° zones of latitude we find:

1. For the faculæ, a marked maximum between 10° and 20°, at nearly the same distance from the equator in both hemispheres; also a secondary maximum in the southern hemisphere

TABLE II.

	Heliographic Latitude	Faculæ					Prominences				
		First Quarter	Second Quarter	Third Quarter	Fourth Quarter	Year	First Quarter	Second Quarter	Third Quarter	Fourth Quarter	Year
North	80° to 90°	3	4	4	9	20	0	7	7	0	14
	70 " 80	4	3	13	10	30	0	3	6	0	9
	60 " 70	3	2	16	5	26	3	5	15	2	25
	50 " 60	10	8	25	12	55	2	1	5	4	12
	40 " 50	12	10	26	13	61	3	12	33	10	58
	30 " 40	18	15	47	13	93	9	16	30	13	68
	20 " 30	34	27	44	32	137	23	28	36	23	110
	10 " 20	42	29	72	47	190	25	16	29	21	91
	0 " 10	17	16	66	27	126	16	16	36	10	78
South	0° to 10°	34	22	37	18	111	9	14	34	18	75
	10 " 20	47	31	72	39	189	15	16	48	14	93
	20 " 30	30	35	76	25	166	18	26	38	24	106
	30 " 40	14	13	46	27	100	24	16	34	27	101
	40 " 50	20	13	29	5	67	7	8	12	11	38
	50 " 60	17	19	30	10	76	2	1	1	4	8
	60 " 70	9	20	43	20	92	49	20	2	0	71
	70 " 80	15	3	41	19	78	41	45	52	2	140
	80 " 90	11	5	19	14	49	8	15	35	10	68

TABLE III.

1894	Mean Frequency								
				Of Prominences			Of Faculæ		
	Of groups of spots and pores	Of spots	Of pores	In northern hemisphere	In southern hemisphere	In both hemispheres	In northern hemisphere	In southern hemisphere	In both hemispheres
January	8.93	11.26	42.85	1.94	3.33	5.28	3.94	4.81	8.75
February	7.90	10.33	47.10	1.69	3.75	5.44	3.55	5.55	9.09
March	5.37	6.33	24.85	1.27	3.53	4.80	3.42	4.92	8.33
April	5.62	11.38	35.43	1.19	3.06	4.25	2.87	4.71	7.57
May	7.19	14.69	57.12	1.95	2.24	4.20	3.70	5.60	9.30
June	8.48	13.80	53.64	1.83	2.71	4.54	3.56	4.50	8.06
July	8.52	12.65	55.74	2.93	3.36	6.29	4.56	5.56	10.12
August	5.55	8.10	38.10	2.10	2.80	4.90	4.22	5.33	9.56
September	6.71	7.53	37.07	1.86	2.79	4.64	5.13	6.58	11.71
October	5.86	11.29	39.68	1.44	2.39	3.83	4.70	5.00	9.70
November	5.76	7.92	33.28	1.89	1.68	3.58	4.64	5.29	9.93
December	4.95	10.86	34.45	1.50	2.50	4.00	5.60	5.30	10.90
First Quarter	7.36	9.22	37.56	1.65	3.53	5.18	3.67	5.05	8.72
Second Quarter	7.18	13.42	49.58	1.70	2.64	4.34	3.45	4.88	8.53
Third Quarter	6.97	9.48	43.83	2.29	2.98	5.27	4.67	5.87	10.54
Fourth Quarter	5.56	10.04	36.00	1.63	2.16	3.78	4.94	5.21	10.15
Year	6.77	10.46	41.79	1.88	2.83	4.72	4.27	5.36	9.63

between 60° and 70° and a marked minimum in the polar regions.

2. For the prominences, a marked secondary maximum in both hemispheres between 20° and 30°. The absolute maximum of the year, however, is in the southern hemisphere between 70° and 80°, while the absolute minimum is in the same hemisphere, between 50° and 60°. Another rather marked secondary minimum occurs in the northern hemisphere between 70° and 80°.

From these observations we may conclude that in the case of the prominences the secondary maxima of 1893 have moved toward the equator in both hemispheres, while the absolute maximum has moved nearly 10° toward the south pole, with an abundant outburst in the zone between 80° and 90°, where little was seen in 1893. There is also to be remarked the complete absence of prominences during the first and third quarters of

1894 in the zone comprised between 70° and 90° in the northern hemisphere. As this was not true of the faculæ it is evident that the phenomena of prominences and faculæ are not always in complete accord.

In general, all the phenomena, spots, faculæ and prominences have continued to decrease since 1893, the year of the last maximum of solar activity.

For the spots the year 1894 has been quite characteristic on account of a marked secondary maximum which occurred in the second quarter, following the absolute maximum in 1893 of the eleven-year period. In this we see a repetition of the phenomenon of the preceding maximum, when the absolute maximum of 1884 was followed by a very marked secondary maximum in 1885.

CATANIA, SICILY,
May 12, 1895.

A SPECTROGRAPHIC DETERMINATION OF VELOCITIES IN THE SYSTEM OF SATURN.

By W. W. CAMPBELL.

HAVING just begun to use the new Mills spectrograph, I have had the opportunty of making its first work a confirmation of the beautiful results obtained by Professor Keeler in the Saturnian system. The spectrograph will be fully described in a subsequent paper, and it is necessary here to state only that it has been designed solely for determining the velocities of stars in the line of sight, using the $H\gamma$ region of the spectrum. The collimator is $723^{mm}.5$ long, the camera about 416^{mm} (not yet accurately determined), and the dispersive train consists of three very dense flint 60° prisms.

A brief description of the guiding apparatus may not be without interest. The method used by Professor Vogel, Professor Keeler and others is inapplicable for photographing in the $H\gamma$ region when the telescope is large, on account of the chromatic aberration of the visual objective. To be certain that the $H\gamma$ image of a star falls centrally on the slit, it is necessary to guide by means of $H\gamma$ light which has already passed through the slit. The Mills spectrograph is so arranged that the light reflected from the first prism surface passes through a 30° prism and thence into the guiding telescope. The observer guides by means of the auxiliary spectrum thus formed. The eyepiece is focused on the $H\gamma$ region, and a wire is so situated that it covers all of the guiding spectrum *except* the $H\gamma$ region. Whenever the observer sees light in the eyepiece, the $H\gamma$ image of the star is properly placed on the slit, and *vice versa;* the slit-length being made equal to the desired spectrum-width. In the case of Saturn very accurate guiding in right ascension was required; and as the $H\gamma$ region of the guiding spectrum was rather faint, it was only necessary to push the eyepiece slightly inwards to bring the yellow region into focus. The planet's spectrum was

kept bisected by the occulting wire of the eyepiece, and in this way very accurate guiding in right ascension was secured.

Four spectrograms were obtained with the slit passing east and west through the center of the Saturnian system. They are:

Plate	Date	Slit-width
1	1895, May 10^d 11^h 0^m to 12^h 35^m	$0^{mm}.04$
2	" 14 10 45 " 12 15	0 .04
3	" 15 10 10 " 12 5	0 .04
4	" 16 9 30 " 11 30	0 .03

The lunar spectrum was photographed on each plate, on both sides of, and as close as possible to, the spectrum of the planet system. The $H\gamma$ hydrogen line was photographed on the first and third plates. All the spectrograms are suitable for measurement. However, the guiding telescope was accidentally displaced for Plate 3, so that the lunar and hydrogen spectra are not symmetrically placed with reference to the planet's spectrum, and for that reason Plate 3 has not been measured.

My photographs confirm the results obtained by Professor Keeler as to the velocity of rotation of the planet, as to the velocity of rotation of the center of the ring system, and as to the fact that the inner edge of the ring system rotates more rapidly than the outer edge. Moreover, the scale of the photographs is sufficiently large to enable us to determine the *excess* of velocity of the inner edge over that of the outer edge.

(*a*) The velocity of the east and west points of the planet's equator, due to diurnal rotation, was found by measuring the inclination ϕ of the planet's lines to the lunar lines, and reducing by the formula[1]

$$V' = \frac{\rho DL \tan \phi}{2\lambda \cos \beta}.$$

The direction of the lunar lines, *i. e.*, the zero reading of the circle, was obtained from one or more readings on each of ten lunar lines. The directions of the planet's lines were obtained

[1] I have used Professor Keeler's notation and equations. See this JOURNAL, 1, 416–427.

from three readings on each of ten lines. The values of ρ on the three dates were:

May 10	$\rho = 0^{mm}.4553$
" 14	$\rho = 0\ .4542$
" 16	$\rho = 0\ .4537$

The velocity computed from Professor Hall's period of rotation for the planet is $10^{km}.29$ per second.

PLATE 1.

λ	D	ϕ	Velocity of limb	$C-O$
Tenth-meters	Tenth-meters		Kilometers	Kilometers
4308.0	11.80	2° 43′	9.27	+1.02
4315.2	11.88	2 32	8.71	+1.58
4325.9	12.12	3 1	10.54	—0.25
4340.6	12.40	2 39	9.45	+0.84
4352.0	12.70	2 20	8.69	+1.60
4358.7	12.84	2 47	10.24	+0.05
4367.8	13.02	2 28	9.20	+1.09
4369.9	13.05	2 32	9.45	+0.84
4371.3	13.08	2 44	10.21	+0.08
4404.9	13.76	2 37	10.21	+0.08
			9.60	+0.69

PLATE 2.

λ	D	ϕ	Velocity of limb	$C-O$
Tenth-meters	Tenth-meters		Kilometers	Kilometers
4315.2	11.88	2° 53′	9.89	+0.40
4318.8	11.94	2 43	9.37	+0.92
4321.0	11.99	3 15	11.25	—0.96
4325.9	12.12	3 1	10.51	—0.22
4340.6	12.40	2 35	9.19	+1.10
4352.0	12.70	3 0	10.89	—0.60
4359.8	12.86	3 0	11.03	—0.74
4367.8	13.02	2 49	10.48	—0.19
4371.3	13.08	2 44	10.19	+0.10
4404.9	13.76	2 35	9.82	+0.47
			10.26	+0.03

PLATE 4.

λ	D	φ	Velocity of limb	C—O
Tenth-meters	Tenth-meters		Kilometers	Kilometers
4315.2	11.88	2° 56′	10.05	+0.24
4318.8	11.94	2 43	9.36	+0.93
4321.0	11.99	2 41	9.27	+1.02
4325.9	12.12	2 45	9.59	+0.70
4340.6	12.40	2 29	8.85	+1.44
4352.0	12.70	2 11	7.91	+2.38
4359.8	12.86	3 2	11.14	−0.85
4367.8	13.02	2 36	9.66	+0.63
4404.9	13.76	2 29	9.65	+0.64
4415.3	13.94	2 20	9.15	+1.14
			9.46	+0.83

The velocity due to the planet's rotation is, from the three plates,

$$\tfrac{1}{3}(9.60 + 10.26 + 9.46) = 9^{km}.77,$$

differing $0^{km}.52$ from the computed value.

(*b*) The velocity of rotation of the middle of the ring system was found by measuring the relative linear displacement δ of corresponding lines in the opposite ansæ, and reducing them by the formula

$$V' = \frac{DL\delta}{4\lambda \cos\beta}.$$

The displacement δ was measured directly by first bringing the lines in the opposite lunar spectra into parallelism with the

PLATE 1.

λ	D	δ	Velocity of middle of ring	C—O
Tenth-meters	Tenth-meters	Millimeters	Kilometers	Kilometers
4308.0	11.80	0.0842	18.06	+0.72
4315.2	11.88	0.0758	16.43	+2.35
4321.0	11.99	0.0782	17.06	+1.72
4340.6	12.40	0.0760	17.04	+1.74
4352.0	12.70	0.0702	16.08	+2.70
4358.7	12.84	0.0818	18.97	−0.19
4359.8	12.86	0.0780	18.09	+0.69
4367.8	13.02	0.0760	17 82	+0.96
4369.9	13.05	0.0675	15.87	+2.91
4371.3	13.08	0.0780	18.33	+0.45
			17.38	+1.40

PLATE 2.

λ	*D*	δ	Velocity of middle of ring	*C*—*O*
Tenth-meters	Tenth-meters	Millimeters	Kilometers	Kilometers
4315.2	11.88	0.0832	18.05	+0.73
4318.8	11.94	0.0755	16.41	+2.37
4321.0	11.99	0.0770	16.79	+1.99
4340.6	12.40	0.0778	17.43	+1.35
4352.0	12.70	0.0772	17.68	+1.10
4352.9	12.72	0.0785	18.01	+0.77
4359.8	12.86	0.0785	18.20	+0.58
4367.8	13.02	0.0740	17.35	+1.43
4371.3	13.08	0.0675	15.86	+2.92
4415.3	13.94	0.0728	18.01	+0.77
			17.38	+1.40

PLATE 4.

λ	*D*	δ	Velocity of middle of ring	*C*—*O*
Tenth-meters	Tenth-meters	Millimeters	Kilometers	Kilometers
4315.2	11.88	0.0805	17.47	+1.31
4318.8	11.94	0.0772	16.80	+1.98
4321.0	11.99	0.0770	16.79	+1.99
4325.9	12.12	0.0828	16.65	+2.13
4337.2	12.36	0.0828	16.11	+2.67
4352.0	12.70	0.0778	17.78	+1.00
4352.9	12.72	0.0788	18.07	+0.71
4358.7	12.84	0.0818	18.91	−0.13
4359.8	12.86	0.0762	17.68	+1.10
4369.9	13.05	0.0732	17.16	+1.62
			17.34	+1.44

micrometer wire and making three micrometer readings on each of ten corresponding lines in the opposite ansæ, and the same number of readings on the same lines in the adjacent lunar spectra. In that manner the prismatic curvature of the lines was satisfactorily eliminated. The results obtained from three plates are given below. The computed velocity of a supposed satellite, situated at the middle of the ring system, is $18^{km}.78$ per second.

The velocity of the middle of the ring system is, from the three plates, $\frac{1}{3}(17.38+17.38+17.34)=17^{km}.37$;

differing $1^{km}.41$ from the computed value.

(*c*) All the lines in the photographs of the spectra of the rings show that the inner edge revolves more rapidly than the outer edge, since they all incline in the direction opposite that of the lines in the planet's spectrum. The excess of the velocity of the inner edge over that of the outer edge was found, by measuring the inclination ϕ' of the lines in the ring spectrum, to the lines in the lunar spectrum, and reducing by the formula

$$V'' = \frac{\rho' DL \tan \phi'}{2\lambda \cos \beta},$$

in which ρ' is the width of the ring in millimeters. One measure of ϕ' was made on each of ten corresponding lines in the spectra of the two ansæ. By taking the mean of the measured inclinations of the same line in both ansæ, the prismatic curvature of the lines was eliminated. The values of ρ' for the three dates were

May 10, $\rho' = 0^{mm}.3410$
14, $\rho' = 0 \quad .3402$
16, $\rho' = 0 \quad .3398$

The computed excess of velocity of a supposed satellite at the inner edge of the ring system over that of a supposed satellite at the outer edge is $3^{km}.87$.

PLATE I.

λ	D	ϕ	Excess for inner edge	$C-O$
Tenth meters	Tenth-meters		Kilometers	Kilometers
4340.6	12.40	1° 8′	3.03	+0.84
4359.8	12.86	1 30	4.14	−0.27
4367.8	13.02	1 29	4.14	−0.27
4369.9	13.05	1 7	3.12	+0.75
4371.3	13.08	0 59	2.75	+1.12
4395.3	13.56	0 50	3.03	+0.84
4404.9	13.76	1 9	3.34	+0.53
4415.3	13.94	0 49	2.41	+1.46
4425.6	14.12	1 12	2.84	+1.03
4427.5	14.16	0 56	2.79	+1.08
			3.16	+0.71

PLATE 2.

λ	*D*	φ	Excess for inner edge	*C—O*
Tenth-meters	Tenth-meters		Kilometers	Kilometers
4315.2	11.88	0° 49′	2.10	+1.77
4318.8	11.94	1 8	2.93	+0.94
4321.0	11.99	1 8	2.94	+0.93
4325.9	12.12	1 1	2.65	+1.22
4352.0	12.70	1 20	3.62	+1.25
4369.9	13.05	1 20	3.72	+0.15
4395.3	13.56	0 57	2.73	+0.14
4404.9	13.76	0 56	2.72	+1.15
4415.3	13.94	1 10	3.43	+0.44
4427.5	14.16	1 15	3.73	+0.14
			3.06	+0.81

PLATE 4.

λ	*D*	φ	Excess for inner edge	*C—O*
Tenth-meters	Tenth-meters		Kilometers	Kilometers
4308.0	11.80	1° 18	3.31	+0.56
4315.2	11.88	0 56	2.39	+1.48
4318.8	11.94	1 11	3.05	+0.82
4321.0	11.99	1 11	3.06	+0.81
4340.6	12.40	1 15	3.33	+0.54
4352.0	12.70	1 26	4.07	−0.20
4358.7	12.84	1 17	3.52	+0.35
4359.8	12.86	1 13	3.34	+0.53
4367.8	13.02	1 3	2.92	+0.95
4369.9	13.05	0 58	2.69	+1.18
			3.17	+0.70

The excess of velocity for the inner edge is, from the three plates,

$$\tfrac{1}{3}(3.16+3.06+3.17)=3^{km}.13,$$

differing $0^{km}.74$ from the computed value. The probable error indicated by the thirty individual results is very small, showing that the direction of the lines in the spectra of the ansæ is well defined and easily measurable.

(*d*) During the exposure on Plate 1, a small portion of the center of the slit was left covered; and at the close of the

exposure the hydrogen spectrum was photographed upon the unoccupied center of the plate corresponding to the previously covered central portion of the slit. The artificial $H\gamma$ line thus fell between the two halves of the $H\gamma$ line in Saturn's spectrum. The center of the $H\gamma$ line in the planet's spectrum was displaced toward the red 0.12 tenth-meter, corresponding to a velocity of recession of $8^{km}.3$. At the time of observation Saturn was receding from the Sun at the rate of $0^{km}.4$ per second, by which amount the observed recession from the Earth must be decreased. The observed recession thus reduces to $7^{km}.9$. The velocity of recession computed from the data of the *Nautical Almanac* is $8^{km}.7$. The error of the observation is therefore $0^{km}.8$.

We may say that these observations agree with those made by Professor Keeler in confirming the accepted period of rotation of the planet and the meteoric theory of the constitution of the rings.

The thirty separate results for the velocity of rotation of the planet, for the velocity of rotation of the middle point of the ring system, and for the excess of velocity of the inner edge of the ring system over that of the outer, agree well with each other, and therefore give small probable errors. However, the results are systematically smaller than theory requires. I attribute the discrepancy to the probability that the slit did not remain upon the major axis of the system of Saturn throughout the exposures. If the method of guiding depends upon light which has already passed through the slit, it is impossible to say from the guiding image whether the slit is directed upon the major axis of the system, or is slightly to one side of the major axis. We may be sure, in long exposures, that the slit would lie ouside of the axis much of the time. The relative velocities obtained from the photographs would refer to portions of the system some distance from the axis, where the relative velocities in the line of sight are smaller than those computed for points lying on the axis. Experiments recently made with the guiding apparatus have convinced me that the image of Saturn could have been displaced

sidewise from the slit sufficiently to account for much of the discrepancy observed, without suspecting, from the guiding image, that the slit did not coincide with the major axis of the system.

The methods of guiding employed by Professor Keeler and myself are thoroughly satisfactory for keeping the image fixed in the direction of the length of the slit; but to be certain that the major axis of the Saturnian system remains constantly upon the slit, it is essential that we see all, or a large part, of the image of the system. This can only be done by guiding in front of the slit. Dr. Huggins' method of guiding by means of the image reflected from a polished slit-plate would seem to be satisfactory. A movable diagonal eyepiece that could occasionally be run in immediately in front of the slit, with a cross-wire adjusted to coincide with the slit, would be satisfactory for keeping the slit upon the major axis of the image. If either of these methods had been employed, I have little doubt that the systematic difference between the observed and computed velocities would not exist, and that the very small probable errors would be still smaller.

MT. HAMILTON,
May 27, 1895.

ON THE EXISTENCE OF A TWILIGHT ARC UPON THE PLANET MARS.

By PERCIVAL LOWELL.

DURING last autumn Mr. Douglass made at this Observatory 275 micrometric measures of the diameters of Mars. After reducing and discussing these, I find that they give as the most probable value for the equatorial diameter of the planet at distance unity: $9''.40 \pm .007$; for the polar one: $9''.35 \pm .005$; and for the polar flattening $\frac{1}{100}$ of the equatorial diameter. But besides such direct outcome of the measurements, there emerges a by-product as interesting as it is unexpected. For their discussion discloses apparently the existence of a twilight arc upon the planet, sufficiently pronounced to be visible from the Earth and actually to have been measured, unconsciously, by Mr. Douglass.

That the fact should be brought to light in this manner, as a silver lining to a mere cloud of figures, is, I think, a point of some curiosity. That the planet had an atmosphere we had what amounted to proof positive before, but that its presence should thus be revealed by measures made for another purpose, and only after these same measures had been carefully discussed, was not so instantly to be looked for. To have made measures with this end in view would not have suggested itself as possible. Yet, as will be seen, the quantities upon which the evidence rests are so large as to be quite beyond the probable errors of observation, larger even than those that disclose the polar flattening.

Following are three tables giving the measures in detail and the means and other values deduced from them.

The first measures were made on the 20th of September and the last on the 21st of November, 1894. From the 12th of October they were taken nearly every night. They were all made by Mr. Douglass. Here at the outset it may be well to point out that whether the results of many observers are to be preferred to one is, omitting personalities, a question entirely of

what it is that is to be determined. If the determination is one of absolute quantities, the more observers the better, provided they be good, but if on the other hand the determination is one of relative magnitudes, one observer is better than many, as his personal equation eliminates itself, whereas two such equations can by no possibility, except the merest coincidence, eliminate each other. Now in the present case, while the determination of the planet's size and even to some extent of its polar flattening are matters of absolute quantity, the evidence of a twilight is one which rests on measures of relative results. The former, therefore, are subject to any systematic errors there may be; the latter essentially free of them. In consequence, in this case the by-product is actually more trustworthy than the main results themselves.

TABLE I.

POLAR DIAMETERS.

Time	No. of Measures	Wt.	Uncor. Meas.	Cor. for Refrac.	Cor. for Irrad. on Limb	Cor. for Irrad. on Term.	Cor. for Phase	Reduced to distance unity	
Sept. 20 14^h 00^m	5	4	20".59	20".59	20".45	20".38	20".54	9".54	E. S.
" 23 14 35	5	5	20 .85	20 .86	20 .76	20 .71	20 .85	9 .51	E. D.
Oct. 5 14 36	7	4	21 .77	21 .78	21 .68	21 .62	21 .68	9 .42	
" 12 13 45	5	5	21 .95	21 .95	21 .85	21 .79	21 .81	9 .40	
" 15 13 42	6	4	21 .84	21 .84	21 .74	21 .67	21 .68	9 .36	E. R. A.
" 17 15	4	4	21 .78	21 .78	21 .68	21 .60	21 .61	9 .37	E. S.
" 19 15 5	5	2	21 .92	21 .92	21 .82	21 .73	21 .73	9 .46	E. S.
" 20 13 57	5	5	21 .69	21 .69	21 .59	21 .50	21 .50	9 .41	E. S.
" 21 13 42	5	5	21 .69	21 .70	21 .60	21 .51	21 .51	9 .42	E. D.
" 21 14	5	4	21 .61	21 .61	21 .51	21 .42	21 .42	9 .39	E. S.
" 23 13 40	5	4	21 .28	21 .28	21 .18	21 .08	21 .08	9 .31	E. S.
" 24 12 15	5	3	21 .17	21 .17	21 .07	20 .97	20 .97	9 .30	E. S.
" 24 12 33	6	3	21 .08	21 .09	20 .99	20 .89	20 .89	9 .27	E. D.
" 29 13 16	5	3	20 .94	20 .94	20 .84	20 .75	20 .75	9 .46	E. S.
" 30 14 50	7	3	20 .78	20 .78	20 .68	20 .59	20 .59	9 .46	E. S.
Nov. 2 13 34	5	6	20 .15	20 .15	20 .05	19 .97	19 .97	9 .36	E. S.
" 4 12 40	5	4	19 .85	19 .85	19 .75	19 .67	19 .68	9 .37	E. S.
" 5 13 10	5	5	19 .61	19 .61	19 .51	19 .43	19 .44	9 .34	E. S.
" 5 14 38	5	3	19 .54	19 .54	19 .44	19 .36	19 .37	9 .30	E. S.
" 6 12 45	5	7	19 .67	19 .67	19 .57	19 .49	19 .50	9 .44	E. S.
" 9 13 35	5	7	19 .23	19 .23	19 .13	19 .05	19 .07	9 .49	E. S.
" 14 14 35	5	6	18 .00	18 .00	17 .90	17 .83	17 .86	9 .33	E. S.
" 15 13 53	5	5	18 .02	18 .02	17 .92	17 .85	17 .88	9 .44	E. S.
" 19 12 45	5	3	17 .20	17 .20	17 .10	17 .03	17 .07	9 .39	E. S.
" 20 11 50	5	2	17 .15	17 .15	17 .05	16 .99	17 .03	9 .46	E. S.
" 21 11 45	5	7	16 .86	16 .86	16 .76	16 .70	16 .74	9 .40	E. S.

TABLE II.

EQUATORIAL DIAMETERS.

Time	No. of Measures	Wt.	Uncor. Meas.	Cor. for Refrac.	Cor. for Irrad. on Limb	Cor. for Irrad. on Term.	Cor. for Phase	Reduced to distance unity	
Sept. 20 14^h 15^m	5	5	19".69	19".70	19".56	19".53	20".39	9".47	E. S.
" 23 14 12	5	6	20 .11	20 .11	20 .01	19 .99	20 .71	9 .45	E. D.
Oct. 5 14 15	7	4	21 .83	21 .83	21 .73	21 .69	20 .94	9 .53	
" 12 13 15	5	5	22 .15	22 .15	22 .05	21 .99	22 .06	9 .51	
" 15 14 2	5	3	21 .96	21 .96	21 .86	21 .78	21 .80	9 .42	E. S.
" 17 14 42	5	4	21 .99	21 .99	21 .89	21 .79	21 .79	9 .44	E. S.
" 19 14 48	5	3	22 .00	22 .01	21 .91	21 .81	21 .81	9 .50	E. S.
" 20 14 11	5	6	21 .80	21 .81	21 .71	21 .61	21 .61	9 .44	E. S. ?
" 21 14 25	6	4	21 .74	21 .75	21 .65	21 .56	21 .56	9 .45	E. D.
" 21 14 45	5	5	21 .57	21 .58	21 .48	21 .39	21 .39	9 .37	E. S.
" 23 14 15	7	3	21 .45	21 .46	21 .36	21 .28	21 .30	9 .40	E. S.
" 24 11 50	6	3	21 .38	21 .38	21 .28	21 .21	21 .24	9 .42	E. S.
" 24 12 50	5	5	21 .32	21 .33	21 .23	21 .16	21 .19	9 .40	E. D.
" 29 13 3	5	3	20 .91	20 .92	20 .82	20 .77	20 .88	9 .52	E. D.
" 30 15	5	2	20 .54	20 .55	20 .45	20 .40	20 .54	9 .43	E. D.
Nov. 2 14 12	5	6	20 .03	20 .04	19 .94	19 .89	20 .10	9 .42	E. D.
" 4 13 10	5	4	19 .87	19 .88	19 .78	19 .74	20 .01	9 .53	E. D.
" 5 13 36	5	4	19 .49	19 .50	19 .40	19 .36	19 .66	9 .44	E. D.
" 5 14 15	5	3	19 .46	19 .48	19 .38	19 .34	19 .64	9 .43	E. D.
" 6 13 20	6	8	19 .59	19 .60	19 .50	19 .46	19 .79	9 .58	E. D.
" 9 13 53	5	7	19 .04	19 .06	18 .96	18 .92	19 .34	9 .62	E. D.
" 14 14 18	7	6	17 .89	17 .92	17 .82	17 .79	18 .36	9 .58	E. D.
" 15 13 36	7	6	17 .68	17 .70	17 .60	17 .57	18 .17	9 .58	E. D.
" 19 13	5	5	16 .76	16 .78	16 .68	16 .66	17 .36	9 .55	E. D.
" 20 12 20	5	6	16 .65	16 .67	16 .57	16 .55	17 .28	9 .60	E. D.
" 21 11 58	4	1	16 .34	16 .35	16 .25	16 .23	16 .98	9 .53	E. D.

TABLE III.

MEANS.—*Polar Diameters.*

		Measures Cor. for Refrac., Irrad., and Phase	Cor. for Inclination	Further Cor. for Twilight Band
Oct. 15th to 23d inclusive	9".385	9".379	9".356	0.011
Oct. 12th to 30th inclusive	9 .384	9 .378	9 .354	0.011
Nov. 2d to 21st inclusive	9 .397	9 .390	9 .353	0.012

Equatorial Diameters.

Oct. 15th to 23d inclusive	9".420	No cor.	9".404	0.010
Oct. 12th to 30th inclusive	9 .440	No cor.	9 .396	0.010
Nov. 2d to 21st inclusive	9 .545	No cor.	9 .402	0.012

RESULTING VALUES.

Equatorial Diameter	9".40 ± .007
Polar Diameter	9 .35 ± .007
Polar Flattening	$\frac{1}{100}$
Visible Twilight Arc	10°

To eliminate systematic errors as much as possible a circular disk of determinate size was made and placed upon the summit of one of the San Francisco peaks, facing the Observatory. The size of the disk was such as to subtend at that distance an angle very nearly equal to the planet's disk. Measurements were then made by Mr. Douglass of the horizontal and vertical diameter of this disk which when corrected for refraction give accurate values for any interesting defects in the observer.

Similar care was taken in the matter of the Martian measures themselves. After adjusting the longitudinal thread of the micrometer according to Marth's ephemeris, parallel or perpendicular, as the case might be, to the planet's polar disk, Mr. Douglass placed his head so that the line joining his eyes was kept parallel to this thread or to the fixed transverse thread at right angles to it, during any one set of observations, and the position was then recorded. Such record appears in column 10 of the table here given: E. S. standing for "eyes parallel to single thread," that is the longitudinal thread of the micrometer, and E. D. "eyes parallel to double (*i. e.*, transverse) threads." As measures were taken in both positions for each diameter at various times, the effect of such position upon the result is deducible at once from the measures themselves.

Of the 275 measures, 140 were of the equatorial diameter and 135 of the polar one. Usually five measures were taken in a set, the mean of each set when reduced to angular value

appearing in column 4 of the table. Columns 5, 6, 7 and 8 give the values when corrected respectively for refraction and aberration, irradiation and phase.

The correction for refraction is the differential effect of refraction upon the planet's opposite limbs at the extremities of the particular diameters measured. It depends both upon the altitude of the planet at the time of observation, and upon the inclination, at that moment, of the particular diameter to the vertical. In many cases it was so small as not to make itself evident in the column.

The correction for aberration, similarly a differential effect, was utterly insignificant in all cases.

Third came the correction for irradiation. This is the only correction into which some fundamental uncertainty enters; but as will be seen it in no case affects the fundamental result, the twilight arc. Two different tests made under different conditions and in each case both upon Professor W. H. Pickering and myself, give limiting measures, the one limit being greater, the other less than would occur with Mars; and as in both cases the observers substantially agreed, the results may be accepted provisionally as having some impersonal value. The first test was made upon a railroad switchhead, a white circular disk with a smaller black circle painted upon it. The size of the circles was unknown to the observers. Their estimates were:

(W. H. P.)	1 (white rim)	1.3	(diam. black circle)
(P. L. two sets, mean)	1 "	"	1.265	" "

The disks and their distance were then measured, and gave:

For the diameter black circle, 202 ^{mm}
radius white rim, 126 ^{mm}
ratio, $\frac{1}{1\frac{8}{9}}$
distance from eye, 57 ^{yds}
$\therefore$ 1 ^{mm} = 3".9

For amount of irradiation in seconds of arc, x, assume amount of irradiation of white rim against the general background of earth of a brown color to have been $\frac{2}{3}$ that of rim

against the black circle. We have, then, for the first observer, the following equation to determine x:

$$\frac{252^{mm} + \frac{10}{3}x}{202^{mm} - \frac{6}{3}x} = \frac{2}{1.3},$$

from which $x = 9^{mm}.2$ or $36''$;
for the second observer $x =$ $40''$.

The second test was on the Moon (November 22), when the old Moon was seen in the new Moon's arms. In this case the irradiation proved to be, for both observers, about $157''$.

In the case of Mars, the value for the irradiation probably lies between these two limits. For the contrast between the Martian limb and the sky certainly lies between that of the black circle against the white rim in the first test and that of the Moon's bright limb against the sky. And as the contrast between the old Moon's limb or the dark limb and the sky is very slight, the contrast in the second test is almost equivalent to that of the Moon's bright limb against the sky. From this it would seem that something near a mean between the two is a probable value for the irradiation in the case of Mars. In my own case this would be probably $100''$, but with Mr. Douglass I judge it, from experience, to be less. If we take $86''$, which is as near as we can come, it gives, with the power (860) used in the measures, $0''.1$ exactly to be subtracted from all the measures.

It is to be noted that, with a given illumination and a given eye, the irradiation correction is a personal constant, not depending upon the size of the disk measured and diminishing inversely as the magnification. Dividing, therefore, $86''$ by 860 we get $0''.1$ as the value of the constant in all measures made except those of September 20, when a power of 617 was employed and gave $0''.14$.

Such is the correction for the limb. The correction for the terminator is given by the equation

$$\frac{1}{m}\left(\frac{\sin a}{\sin a + \gamma}\right)^{\frac{1}{n}} - \left(\cos \gamma - \cos (\gamma + a)\right)$$

where γ = the phase angle,
α = the angle from the terminator to the point whose irradiation is sought,
m = the ratio of the irradiation at the limb to the radius, and
n = the ratio of the illumination to the irradiation.

Fourth was the correction for phase. Inasmuch as the phase axis and the polar axis did not in general coincide, there entered into its determination, beside the amount of the lacking lune, the angle of inclination of the two axes. So that the amount of defalcation had to be calculated in accordance each night.

Fifth was the correction needed to reduce the diameter, measured for the polar one, to the true polar diameter. The diameter measured perpendicular to this, or the apparent equatorial diameter, though not in fact an equatorial diameter, was always exactly equivalent to one, since its extremities were always each 90° distant from the pole. The other, however, was that diameter of the ellipse made by the plane passing through the polar axis, which was inclined to the polar axis by the angle of tilt and needed to be reduced to that ellipse's minor axis to give the true polar diameter.

Lastly the correction for astigmatism was nil; inasmuch as the value of a micrometer turn and the image itself were increased or diminished in the same proportion.

So soon as the measures had been corrected and reduced to distance unity, the first thing to show was the polar flattening—so large as to be almost unmistakable even before taking the means. Nearly as instantly it was apparent that something had affected the equatorial measures between October and November, the November measures seeming systematically larger than the October ones, the corresponding polar measures on the other hand showing no such increase. Struck by this appearance, and suspecting its cause, instead of taking the mean of all the measures for each diameter I divided them into sets according to their proximity in date to the time of opposition and took the mean of these sets. Opposition recurred on October 20. The measures taken, therefore, between October 15 and October 24

were all made within five days of opposition; those taken on October 12, 29 and 30 from eight to ten days away from it; and those from November 2 to November 21 from thirteen to thirty-two days distant. Taking the first two sets together against the third we have:

Mean 64 meas.	Oct. 12–30	Equat. diam. cor. for refrac., irrad. and phase.....	9".440 ± .010
Mean 59 meas.	Nov. 2–21	Equat. diam. cor. for refrac., irrad. and phase.....	9".545 ± .012
Mean 63 meas.	Oct. 12–30	Polar diam. cor. for refrac., irrad. and phase.....	9".378 ± .011
Mean 55 meas.	Nov. 2–21	Polar diam. cor. for refrac., irrad. and phase.....	9".390 ± .011

The agreement of the two polar means is as striking as the disagreement of the two equatorial ones is noticeable. The two polar values differ by but twelve units in the third place of decimals, a quantity much less than the probable error of either measure. The equatorial values, on the other hand, differ by one hundred and five such units, or by ten times the probable error. The divergence appears yet more systematic if we divide the equatorial diameters into three sets, as above mentioned, and take the mean of each set.

Mean,	October	15–24	Equatorial diameter,	9".424
"	"	12–29	" "	9".497
"	November	2–21	" "	9".545

As these measures had already been corrected for everything, phase included, both the equatorial and the polar ones should have agreed among themselves on the several occasions. The polar did so in a most satisfactory manner; the equatorial did not; now the only point of dissimilarity in the conditions of measurement of the two consisted in the fact of phase.

The polar diameters terminated always, practically speaking, in two bright limbs, as did also those equatorial diameters that were measured between October 15 and October 24. In other cases the equatorial ones were bounded but on one side by a limb, on the other being limited by a terminator. In the polar and

the first equatorial sets the phase angle was, as a rule, less than 5°; in the middle equatorial set it was between 5° and 10°; while in the last it rose from 12° to 25°. Apparently, then, the cause lay somehow included in the question of phase. Now there is a cause dependent on phase which is capable of explaining the observed effect, and seemingly only one. If the planet possessed an atmosphere dense enough, its twilight arc would produce precisely the increase noted, for it would insensibly increase the measures at a distance from opposition, and when these were subsequently corrected for phase, upon the supposition that there was no twilight arc, the result would be an apparent increase in the equatorial diameter.

The effect, therefore, is explicable by the presence of a measurable twilight arc. Nor is there any other factor in the case capable, apparently, of accounting for it, for the data upon which this part of the ephemeris rests are too accurately known to admit of errors of the sort, being such well-determined things as the areocentric angle between the Earth and the Sun, and the relative distances of the two planets from that body. Besides these there is nothing which enters into the calculation but the position of the pole of Mars, and this would have to be some thirty-five Martian degrees in error to explain the discrepancy. Such an error of position is quite inadmissible.

Another point connected with these measurements is worth noting: that in the absence of atmosphere the measures of the equatorial diameter as soon as the phase became marked should have shown a decrease, inasmuch as it would be impossible for an observer to catch the last faintly illuminated portion, whereas, on the contrary, they showed an increase.

To determine the extent of the twilight arc: If we call E the angle measuring the amount of the phase; T = the angle between the radius to the sunset point and the radius prolonged to the point of the atmosphere last illuminated; a = the true equatorial radius reduced to distance unity, and b = the corresponding amount of its apparent excess, we have the following equation to determine T:

$$\frac{1 + \cos E + \sin E \tan T}{1 + \cos E} 2a = 2a + b,$$

whence

$$\tan T = \frac{b + \cos E}{2a \sin E}$$

in which are to be substituted the values of $2a$ and b. But as b is the mean value of the excess of the equatorial diameter from November 2 to November 21 we must take the mean value of $\frac{1 + \cos E}{\sin E}$ between the same limits.

If dE were constant, the mean value would be:

$$\frac{\int_{E_1}^{E_2} \frac{1 + \cos E}{\sin E} dE}{\int_{E_1}^{E_2} dE},$$

where E_1 and E_2 represent the extreme values of E; but as dE is not constant its value, in terms of dt, must be substituted from the elliptic motions. A short cut to the result may, however, be taken by deducing this mean value from the differences, properly reduced, of the values in columns 7 and 8 of Table 2, for the given dates.

By so doing we get:

$T = 5°$, or the twilight arc $= 10°$; since T is half the twilight arc.

This twilight arc introduces a correction into the values of the equatorial diameter, of the polar diameter, of the polar flattening and of the twilight arc itself. Introducing these corrections we get for the final values of all these quantities the following close accordance.

Equatorial Diameter,	Oct. 15–24	9″.402
" "	Nov. 2–21	9 .402
Polar Diameter,	Oct. 12–30	9 .354
" "	Nov. 2–21	9 .353
Polar Flattening, $\frac{1}{100}$		
Twilight Arc, 10°		

We will now consider what seem anomalies, the September observations. In these the equatorial measures come out too small as compared with the late November ones, while the polar ones come out considerably too large. In the case of the equatorial measures the differences may conceivably fall within the errors of observation since there are instances of like variation elsewhere. In the case of the polar measures, however, the discrepancy seems too large to be thus accounted for, being of such size as to make the polar diameter on those dates much larger than the equatorial. On reflection a possible cause suggests itself for such increase. For in September there was still a visible polar cap, excentric to the pole and, as the pole was tilted toward the observer, the rotation of the planet would at times bring it upon the limb where its great brilliancy would produce excessive irradiation and cause the polar diameter to measure too much. Now calculation reveals the fact that at the hours on September 20 and 23 when the measures were made the polar cap was indeed upon that side of the pole farthest from the observer and not very far from its position of maximum irradiation effect. On the other hand on October 5, in whose measure no such increase appears, the ephemeris shows that at the time the measure was made the polar cap was on the hither side of the pole; as it was also on October 12. Here, then, we have what seems a satisfactory explanation of the phenomenon.

On October 13 the polar cap vanished and substantially continued so; so that the subsequent measures were little or not at all affected by it.

From the length of the twilight arc, the density of the atmospheric envelope at the surface of the planet may be calculated, supposing the atmosphere to be similar to our own. For if $x =$ height above the surface and $y =$ the density of the air at that point, we have generally from the property

$$\frac{dy}{dx} = -ay,$$

$$\log y = -ax + b,$$

as the equation to determine y. We should have, therefore, for the Earth the equation:

$$\log y = -a_1 x + b_1,$$

and for Mars the corresponding one:

$$\log y = -a_2 x + b_2.$$

The values of the constants a_1 and b_1 are known from experiment and the value of a_2 is given by the equation

$$\frac{a_1}{a_2} = \frac{g_1}{g_2},$$

where g_1 and g_2 are the forces of gravity at the surface of the two planets respectively, since the densities are proportional to the pressures and these in turn proportional to the forces of gravity.

If the two atmospheres were similar we should have for the heights, x_1 and x_2, at which respectively the reflected light ceased to be capable of detection:

$$y_1 = y_2$$

$$\text{or } \log y_1 = \log y_2,$$

whence

$$-a_1 x_1 + b_1 = -a_2 x_2 + b_2,$$

from which we should get the value of b_2. In the determination the constants would themselves be functions of x, owing to changes in the temperature, in the refraction, etc., and the whole would be affected by the difference in distance and aspect at which the effect was viewed in the two cases.

But as the conditions at the surfaces of the two planets are very unlike and as dissimilar conditions would affect the relation between the twilight arc and the density dissimilarly, we cannot deduce the density from the datum of the twilight arc. We can only see in it another proof of the presence of an atmosphere of some sort or other, and regard it as giving, not a maximum, but a minimum value of such.

LOWELL OBSERVATORY.
May 7, 1895.

SPECTROSCOPIC OBSERVATIONS OF COLORED STARS.

By FRIEDRICH KRUEGER.

I BEG to communicate the following list of observations of such colored stars as either have not hitherto been examined spectroscopically, or seemed to me to require a revision on account of the dubious results of previous observers. Excepting the last three, the stars are taken from my catalogue of colored stars (*Publication VIII der Sternwarte in Kiel*), and the numbers in the following list refer to the similar numbers of that catalogue.

The observations were made with the Schroeder refractor of 266^{mm} aperture and 390^{cm} focal length belonging to the Observatory of Bamberg. Three small ocular spectroscopes, made by Otto Toepfer, of Potsdam, were employed with an eyepiece of power eighty. In some cases, where the proximity of bright stars disturbed the observations, the insertion of a diaphragm in the focus was found very helpful. On all the nights of observation the atmospheric conditions could be described as only moderately good. Since I was able to employ in my previous observations a telescope of only 216^{mm} aperture, it is possible that my present estimates of magnitude are throughout somewhat too bright. The year of all the observations is 1895.

In accordance with the suggestion of Hermann J. Klein and the practice of Schmidt, Dunér, and others, I have given the estimates of the colors of the stars in numbers (0 = white; 4 = yellow; 8 = reddish; 10 = pure red). The exponents ^{m} and ^{c} serve to distinguish between the estimates of magnitude and color. The bands are designated with numbers in the same way as by Dunér, further particulars being given in his memoir *Sur les étoiles à spectres de la troisième classe*, and in the introduction to my catalogue.

The number of known stars of classes III and IV has been

greatly increased since the appearance of my catalogue. While the number of stars between the North Pole and 23° South Declination to be regarded as certainly belonging in classes III and IV was then about 1157, now it has been increased by more than six hundred stars north of the equator. I have similarly catalogued these stars, and the list will be published as a supplement to my catalogue. In accord with a personal communication from Mr. T. E. Espin, I would also point out that all stars down to the ninth magnitude, north of the equator, which have banded spectra now seem to be known. Below this limit the number of colored stars appears to be very great, in agreement with the general abundance of the fainter stars. Knowledge of the stars having banded spectra and lying between the equator and 23° South Declination is far from complete, so that many interesting spectra will yet be found in this region.

No.		OBSERVATIONS.		
67	W Cassiopeiæ.*	Mar. 13	8ᵉ.0	Bands.
	The spectrum is too faint to permit a decision as to its type. The variability of this very red star was first pointed out by Espin, and it has been since confirmed by Hartwig.			
532	U Orionis.	Mar. 18	8ᵉ.4	III³.
	The color is a peculiar copper-red. All the bands 1–11 are readily recognized, being very broad and distinctly cut off. Bright lines could not be seen.			
706	7ᵐ.5	Apr. 17	6ᵉ.4	III².
	The bands are quite broad and dark.			
	7ᵐ.3	Apr. 22	6ᵉ.3	
	Bands 2–8 are normally developed, quite broad, and black. The star *B.D.*+6° 1273, visible in the same field, is somewhat less intensely colored (6ᵉ.0), of class II, and much brighter.			
707		Apr. 17 and 22	6ᵉ.2	III².
	The spectrum is not so finely developed as that of No. 706, but bands 2–8 are all well marked, quite broad and dark.			
709	7ᵐ.0	Apr. 17	6ᵉ.0	III¹.
	Bands 2–8. Spectrum entirely normal.			

*Further particulars as to its variability may be expected from Hartwig within a very short time.

714 $7^m.8$ Apr. 17 $7^c.8$ III? IV.
Red and orange portions very faint; broad gaps in green; blue visible; bands throughout the visible spectrum.

730 $7^m.0$ Apr. 17 $5^c.8$ II–III.
In red and green are two shadings, possibly strong lines.

746 $5^m.4$ Apr. 25 $5^c.0$ II^3.
Strong lines.

766 $6^m.7$ Apr. 14 $6^c.0$ III.
Bands 2–8 are normally developed.

771 $8^m.7$ Apr. 14 $5^c.8$ III?
Spectrum appears to have broad bands.

775 $7^m.3$ Apr. 14 $5^c.2$ III.
Type is normal; the bands are less sharply defined than in No. 774.

778 V Cancri. $7^m.2$ Apr. 14 $5^c.8$ III^1.
Bands 2–8 are distinct and normal.

780 $8^m.0$ Apr. 14 $5^c.6$ III.
No doubt as to type, although bands are difficult.

781 $7^m.8$ Apr. 14 $5^c.2$ III.
No doubt as to type, although bands are difficult.

792 $7^m.1$ Apr. 14 $5^c.0$ II–III.
The spectrum is certainly not purely of type II.

795 $7^m.1$ Apr. 14 $4^c.2$ II.
Of the type of α Tauri.

806 S Hydræ. Apr. 16 $6^c.0$ III.
Spectrum faint, but undoubtedly III; all the bands 2–8 are recognizable as normally developed.

810 T Hydræ. Apr. 16 $7^c.8$ IV?
Red and orange very faint, green very bright, but blue and violet almost entirely lacking; very broad and dark bands through the whole visible spectrum.

821 $7^m.0$ Apr. 16 $6^c.0$ III^1.
All the bands 2–8 are normally developed.

823 $8^m.0$ Apr. 16 $6^c.8$ III?
Bands are evident, but too faint for determining the type.

830 $7^m.0$ Apr. 16 $5^c.8$ II^1.
Hartwig estimated the color of the star on the same evening with the six-inch comet seeker as faint orange.

834 $7^m.9$ Apr. 16 $4^c.5$

No absorption bands could be recognized.

835 Apr. 16 $6^c.0$ III?

Spectrum appears similar to that of μ Ursæ majoris. Strong atmospheric undulations.

841 $6^m.4$ Apr. 12 and 16 $5^c.0$ II.

844 $6^m.4$ Apr. 12 and 16 $4^c.2$ II.

Purely solar type.

846 $7^m.9$ Apr. 12 and 16 $5^c.9$ III.

Bands 2–8 are normally developed.

852 $6^m.2$ Apr. 12 $4^c.3$ III.

Faintly developed III; bands difficult.

853 R Leonis. Apr. 12, 16, 17, 26 $8^c.6$ III^3.

On each occasion I found the spectrum to be III^3 with all the bands 1–11. All the bands were deep black, broad and sharply defined. I saw with certainty no bright line but $H\beta$; on Apr. 26 I suspected a bright line in the yellow (D).

860 $5^m.3$ Apr. 12 $7^c.8$ III^c.

Bands 2–8 are very plain, but narrow.

864 $6^m.0$ Apr. 16 $4^c.5$ II.

870 $7^m.0$ Apr. 16 $5^c.5$ III^1.

Bands are normally developed.

873 Apr. 12 $5^c.4$ II^3.

Of the solar type.

874 $6^m.0$ Apr. 16 $5^c.2$ II^c.

Of the solar type.

877 $7^m.0$ Apr. 16 $6^c.2$ III^1.

Bands 2, 3, 7 and 8 are very plain; 4 and 5 very faint.

880 $7^m.2$ Apr. 16 $5^c.8$ III^c.

In spite of low altitude all the bands 2–8 were plainly recognized.

883 Apr. 13 $5^c.0$ III^1.

All bands 2–8 are strong, but narrow.

884 $5^m.8$ Apr. 15 $6^c.2$ II–III.

Of the type of α Tauri.

886 Apr. 13 $5^c.0$ III.

Type normal; bands 2–8 are plain.

891 Apr. 15 $5^c.4$ III^1.

Type normal; bands 2–8 are plain, and quite dark.

893 $7^m.5$ Apr. 15 $6^e.0$ III?
Broad bands through the whole spectrum, but they are too faint for a certain determination of the type.

894 U Hydrae. Apr. 13 $8^e.0$ IV^3.
Red very bright; blue well seen; the characteristic bands well defined; D_3 bright?

897 Apr. 13 $4^e.6$ III.
The spectrum is indistinct, but the type can be ascertained with certainty.

898 $6^m.7$ Apr. 16 $6^e.4$ III^1.
Bands 2–8 are dark, quite broad, and well defined.

906 Apr. 12 and 15 $5^e.7$ II^2.

907 V Hydrae. $8^m.3$ Apr. 15 $8^e.5$ IV^3.
In spite of the star's faintness, its spectrum is very plain; the red and green portions are bright, as well as the yellow, but the blue is very faint.

911 $7^m.0$ Apr. 13 $5^e.4$ II? III.
Broad stripes in red and orange; probably of the type of α Tauri.

914 $6^m.6$ Apr. 13 $5^e.8$ III^1.
Type certain; band 3 is the strongest.

$6^m.5$ Apr. 15 $5^e.4$ III^2.
Bands 2–8 are all well marked and black; No. 2 and particularly 3 are very strong.

917 R Crateris. $9^m.0$ Apr. 15 $8^e.4$ III? IV.
Extremely broad and dark bands between bright zones, of which the green is the brightest and the blue very faint. I cannot estimate the color of the star so strong as Dunér, $9^e.5$.

920 $6^m.0$ Apr. 13 and 15 $4^e.0$–$3^e.8$ II.

927 $6^m.8$ Apr. 15 $5^e.6$ III^2.
Bands 2–9 are normally developed, black, and well defined. Nos. 2 and 3 are stronger than 7 and 8.

932 $7^m.3$ Apr. 15 $5^e.4$ III.
Type normal.

943 $8^m.0$ Apr. 15 $5^e.7$ III?
The bands are certainly recognizable, but the spectrum is too faint for an accurate assignment of type.

950 Apr. 15 $5^e.4$ III.
Type certain; bands difficult.

953 $7^m.2$ Apr. 15 $5^c.8$ III.
Bands dark, but indistinct. Espin's observation, "'89 March 9: $H\gamma$ and D_3 bright," is, according to his statement in a letter, erroneous.

963 $7^m.4$ Apr. 15 $5^c.8$ III.
Bands badly defined.

983 $8^m.0$ Apr. 13 $7^c.5$ III^3.
All the bands 2–9 are black, and clearly marked.

985 $7^m.7$ May 24 $5^c.5$ II? III.
Probably III. Bands sometimes suspected; image indistinct.

986 $7^m.3$ May 24 $7^c.0$ III^1.
Bands 2 and 3 are the strongest.

988 T Ursae majoris. Apr. 16 $5^c.6$ III.
Bands 2–8 can be recognized, but are not deep.

Apr. 30 $6^c.0$ III.
Bands in red and orange broad, faint and narrow in green, very broad in blue.

989 $6^m.8$ Apr. 13 $4^c.8$ II^1.
Unquestionably of the solar type.

994 On Apr. 13 and 14 I took the spectrum to be III (II), and III? respectively; with faintly developed bands, like the spectrum of μ Ursae majoris.

On Apr. 15 and 16, with better seeing, the spectrum appeared distinctly II^1 of the type of α Tauri. The color is $4^c.9$ (mean of the four observations).

995 Apr. 13 and 15 $5^c.2$ II–III.
Genuine bands are not recognized; spectrum seems similar to that of α Tauri.

1001 $8^m.5$ Apr. 13 $6^c.2$ III?
Spectrum too faint.

Apr. 15 $5^c.7$ III.
The typical bands are distinct.

1005 Apr. 13, 14, and 15 $3^c.7$ II.
Normal solar type.

1007 $6^m.0$ May 24 $5^c.8$ III.
Type of spectrum undoubted, but it is feebly developed. 2 and 3 are the only bands seen.

1011 $6^m.8$ Apr. 22 $6^c.0$ III–II.
Transition type; traces of bands are distinct.

1034 $6^m.3$ May 28 $5^c.6$ III.
The six ordinary bands are visible; those in the bluish-green are broad and deep; the others are narrow.

1036 $7^m.4$ Apr. 15 $7^c.0$ III^3.
All the bands 2–9 are broad, dark, and sharp; 2, 3, 7, and 8 are nearly equally broad and strong.

1037 $6^m.8$ May 28 $5^c.8$ III.
The bands 2–8 are feebly developed.

1038 $6^m.6$ May 28 $6^c.6$ III^1.
The bands 2–9 are easily seen, but they are neither broad nor deep.

1044 $5^m.8$ May 28 $5^c.8$ II^3.
Type of α Tauri.

1062 $6^m.5$ Apr. 30 and May 27 $6^c.0$ III.
The spectrum is fairly marked.

1066 $5^m.5$ May 27 $4^c.0$ II^3.

1067 $5^m.4$ May 28 $5^c.0$ II^1.

1068 $7^m.8$ May 28 $4^c.6$
Spectrum continuous.

1073 $7^m.2$ May 12 $6^c.6$ III?
Bands suspected; image unsteady.

1074 $6^m.0$ May 28 $6^c.0$ III^1.
The bands are visible, apparently as far as 9 inclusive; they are deep and well marked.

1075 $4^m.9$ May 29 $6^c.0$ III^3.
Very beautiful; the bands 2–9 are dark and broad throughout, 2 and 3 extremely broad and deep. Perhaps variable.

1083 $6^m.7$ May 28 $5^c.4$ II? III.
Bands suspected in the bluish-green.

1091 D'Arrest considered this spectrum as one of the finest. In agreement with the observations of Dunér in 1880–84, and mine in 1891, I find the type to be still only III^1, on Apr. 17 and 30. Bands 2–9 are visible; they are black and distinct, but, excepting 2 and 3, are narrow. Color $5^c.8$.

1092 May 27 $6^c.0$ II^2.
Fine orange.

1094 $6^m.8$ May 12 $4^c.0$
Spectrum apparently continuous.

1096 $8^m.2$ May 28
Color and spectrum doubtfu

1098			May 28	$5^{c}.6$	III.
	Bands pale.				
1116			May 28	$4^{c}.8$	II.
	$H\gamma$ very strong.				
1120			May 28	$3^{c}.5$	I (II)
	Many fine lines, the hydrogen lines very distinct.				
1123		$8^{m}.0$	May 28		
	Color not pronounced; spectrum very faint; bands not visible.				
1127		$6^{m}.4$	May 28	$4^{c}.0$	IIe.
1130		$8^{m}.0$	May 28	$6^{c}.0$	IIIe.
	The bands 2–8 are very well marked, broad and dark.				
1133			May 28	$3^{c}.5$	II.
1136		$5^{m}.5$	Apr. 22	$6^{c}.5$	II^{3}.
1139		$6^{m}.8$	Apr. 22	$7^{c}.0$	III^{3}.
	All the bands are normal; deep, black, and distinct.				
1147		$6^{m}.5$	May 28	$4^{c}.7$	II^{1}.
1152		$6^{m}.0$	Apr. 22	$3^{c}.0$	II^{3}.
1162	S Coronæ.	$8^{m}.0$	Apr. 30	$6^{c}.8$	III.
	Bands 2–8 can be recognized, but only with difficulty.				
1172		$6^{m}.5$	Apr. 22	$4^{c}.5$	II.
	Of the solar type.				
1178		$6^{m}.6$	May 28	$6^{c}.7$	IIIe.
	The bands are broad and deep throughout the spectrum as far as 9 inclusive; 2 and 3 are as strong as 7 and 8.				
1185		$5^{m}.0$	Apr. 30	$7^{c}.0$	IIIe.
	Bands 2–9 are easily recognized, well defined and dark; 2 and 3 are very strong; 7 and 8 somewhat fainter; 4 and 5 are plain in spite of strong atmospheric undulations. Spectrum is similar to that of 1091.				
1196		$5^{m}.5$	May 27	$4^{c}.2$	IIe.
1214		$4^{m}.8$	Apr. 30	$5^{c}.2$	II^{3}.
	The type is that of α Tauri.				
1224		$5^{m}.5$	Apr. 30	$6^{c}.0$	III.
	The narrow bands are well indicated, but are not very dark. They are visible into the violet.				
1296		$6^{m}.8$	May 28	$6^{c}.8$	III^{1}.
	The bands are visible as far as the blue; they are broad, but not deep.				

1893, Apr. 28, 7m.0, OR, III3. *712:* *E*, 1893, Mar. 28, 8m.0, OR, III3, var.? *735:* Under Baxendall should be added: "It was examined with the spectroscope at Lord Lindsay's Observatory, but showed no peculiarity, and no particular color seemed to predominate in its spectrum." *760* is *Bm*, 192. *811:* *G.* & *L.*, 1894, May 6, III1, red color strongly conspicuous. *829:* On 1883, Jan. 5, *Pe* did not find the star; Jan. 6, 8m.9, rather reddish, spectrum faint; in March and April, 1895, I have repeatedly searched for the star, but without success. *853:* *G.* & *L.*, 1894, May 6, after the maximum. *Hβ* and perhaps also *Hα* bright; D_3 bright! Very transparent air. May 8, *Hα* bright; *Hβ* and *Hγ* certainly not; bands easily seen. May 28, *Hβ* bright. June 1, *Hα* certainly bright. *890:* *E*, 1893, Mar. 13, 7m.0, OR, III1. *934:* Under *E*, for IV write III. *964:* *Pe*, 1883, Jan. 6, somewhat orange, spectrum continuous. *1043:* The observation of *Pe* reads, "1883, Jan. 5, white, spectrum continuous." *1054:* *Pe*, 1883, Jan. 6, very red; spectrum banded, but too faint to decide whether III or IV. *1065:* *E*, 1888, Jan. 26, a fine orange, III, bands not deep; 1889, Jan. 23, *Hβ* bright? 1892, Apr. 22, *Hβ* again suspected as bright, bands in red are strong, but in other portions weak. *1079:* *E*, 1893, Apr. 9, 7m.0, OR1, III1. *1082:* *E*, 1889, Mar. 28, 8m.7, R, III3, very deep bands. *1108:* Variable according to *Hg*. *1115:* *E*, 1888, Apr. 6, 7m.7, R, III3; *G.* & *L.*, 1894, June 30. *Hβ* exceptionally bright; *Hα* occasionally appears bright; the spectrum is wonderfully developed; July 5, *Hα* bright. *1195* and *1211:* Consult *E* in *A.N.* 3200. *1244:* *G.* & *L.*, 1894, June 30 and July 5, III1. *1382:* *E*, 1893, Aug. 19, 9m.0, R, III? *1383:* *E*, 1893, Aug. 19, 8m.7, R, IV? *1385:* *E*, 1893, Aug. 19, 9m.0, R, IV? *1444:* de Ball, 1892, July 19, 8m.4, R1; *K*, 1894, Sept. 15, 7s.4, IV1. *1450:* *E*, 1893, Aug. 19, 8m.3, R, III3; *K*, 1894, Sept. —: 8m.0, 6s.6, III1; bands are dark and broad. *1463:* According to later observations by Espin and myself the star *B.D.*+36° 3239 is white and of class I. The position given by Gage is 10s preceding and 3′ S. Espin did not see the star in 1886–88. There was probably a mistaken identification by me. *1467* is variable according to Espin. *1470:* Under *Sa* add: 6m.9, not variable. *1474:* *G.* & *L.*, 1894, July 6, III, spectrum not marked but easily identified. *1478:* *E*, 1893, Aug. 19, 7m.0, OR, III1. *1498:* *G.* & *L.*, 1894, July 6, III3; also on July 28 no bright lines were seen. *1513* is V Aquilæ. *G.* & *L.*, 1894, July 6, IV, bands well seen, red prominent. *1520:* *G.* & *L.*, 1894, June 23, *Hα*, *Hβ*, *Hγ* and D_3, bright; June 30, *Hα*, *Hβ*, *Hγ*,

bright; July 2, *Hα* very bright, uncertain whether *Hβ*, *Hγ* and D_3 are bright; July 5, *Hβ* seen bright only briefly, D_3 certainly bright; July 6, no bright lines. *1592:* *G. & L.*, 1894, June 23, D_3 perhaps bright, type seems not to be III but II. *1594:* *E*, 1892, Jan. 1, $7^m.5$, OR^1, III^1; *K*, 1892, Jan. 15, $5^s.4$, III. *1646:* Under *E* instead of III^3 read III? *1655:* The star observed by *E* is *B.D.*$+20°$ 4390, whose place for 1900 is $20^h\ 17^m\ 57^s+20°\ 48'.5$. *1668* and *1672:* *E* makes the remark "misidentified?" *1682:* Lund zones, 1881, Aug. 16 and 18, $7^m.7$ and $7^m.8$, R^s. *1683:* *Hg* confirms variability (see *A.N.* 3191 and 3211). *1690:* *E*, 1893, Sept. 16, 11^m, RR, IV^1. *1699* is RS Cygni. *1701:* *G. & L.*, 1894, July 23, III. *1722:* Lund zones, 1881, Oct. 7, $6^m.7$, reddish-yellow; Oct. 14 and 16, $6^m.5$ GR, and $6^m.0$ RG. *1727:* Under *E* strike out the words "1891, Sept. 12, $9^m.2$, OR, B, III?" *1729:* *E*, 1893, Sept. 16, $9^m.2$, IV? *1749:* The declination is $+11°\ 44'.7$, not $4'.7$. *1795* is U Delphini. *1802:* *E*, 1893, Sept. 9, R, III^s. *1803* is V Delphini. *Hg*, R^s. *1942:* Under *E* the words "$9^m.5$ bis IV?" are to be stricken out, and "not identified" substituted; 1893, Sept. 16," not seen." *1943:* Under *E* add: a broad band; 1893, Sept. 16, $9^m.2$, R, III^s. *1955:* *E*, 1893, Sept. 19, $8^m.7$, RR, IV peculiar, 9 extraordinarily intense. *1975:* *E*, Oct. 3, $8^m.7$, OR^1, III^1. *1978:* *E*, 1887, Sept. 18, $7^m.5$, R^1, III^3. *2037:* *Pe*, 1882, Dec. 7, III feebly developed?" *2039:* The star observed by *E* is *B.D.* $+54°2863$, $9^m.5$, whose place for 1900 is $22^h\ 43^m\ 40^s+54°\ 38'.0$; instead of IV? under *E*, read III^3; *E*, 1893, Oct. 8, R, III^3, var. *2061:* *E*, 1887, Oct. 15, $7^m.5$, R^1, III^s. *2079:* The star observed by *E* is *B.D.*$+52°3386$, $9^m.1$, whose place for 1900 is $23^h\ 7^m\ 1^s+52°\ 21'.0$; *E*, 1893, Oct. 8, $9^m.0$, R, III^3. *2102:* The star observed by *E* is *B.D.* $+52°3440$; *E*, 1893, Oct. 8, $7^m.3$, OR^1, III^1. *2153:* The star observed by *E* is *B.D.*$+42°$ 4827, $8^m.4$, whose place for 1900 is $23^h\ 59^m\ 28^s+42°\ 59'.7$.

The following numbers refer to the *Nachtrag*, p. 142 of the catalogue. *15:* *E*, 1893, Dec. 11, $8^m.6$, R, III^s. *16:* *K*, 1894, Oct. 21, $6^s.8$, III^s. *18:* *E*, 1892, Jan. 1, $8^m.5$, OR, III. *42* is *B.D.*$+40°1310$. *56* is *B.D.*$+24°$ 1386, $7^m.8$; the positions of these two are correct. *68:* *E*, 1892, Apr. 22, $6^m.8$, OR, III. *122* is W Aquarii. *129:* Lund zones, 1880, Sept. 26 and 27, $7^m.7$ and $7^m.4$, GR.

BAMBERG, May 2, 1895.

Minor Contributions and Notes.

NOTICE.

Attention is called to the fact that THE ASTROPHYSICAL JOURNAL is not issued in July or September. The next number will be published October 1.

PRELIMINARY NOTE ON THE RADIATION OF INCANDESCENT PLATINUM.

IF we determine the curve of energy in the spectrum of an incandescent solid we find that it varies with the temperature of the radiating body. What is the nature of this variation? Is it merely a proportional increase of energy in all parts of the spectrum, or does the amount in the shorter wave-lengths increase in a greater proportion than that in the longer as the temperature of the source becomes higher? If the latter is true, the position of maximum energy in the spectrum would shift toward the violet end; if the former, there would be no shifting of the curve. This point has been carefully studied by Dr. Jacques in this laboratory, and by Professor Langley. in Allegheny, with opposite results. Professor Lecher, by a null method, though not a very accurate one, discovered no shift.

The following very accurate null method suggested itself to me, and was tried: Two bolometers were so connected that when heated they would produce deflections of the galvanometer in opposite directions; if equally heated, no deflection would be produced. The spectrum of an incandescent platinum strip, heated by an electric current to a nearly white heat, was formed by a rock-salt prism and lens, and the bolometers so placed in this spectrum, on oppcsite sides of the point of maximum energy, that they received equal amounts of heat and caused no deflection of the galvanometer. The current was now diminished until the radiating platinum was of a dull red color; there was an immediate deflection of the galvanometer indicating a shifting of the energy curve toward the longer wave-lengths. By moving a screen partially in front of the projecting lens I found that this result was not produced by a diminution of the amount of heat falling on

the bolometers so long as the temperature of the radiating source was unchanged. This result, which does not depend on the comparison of very similar curves obtained at different times, is decisive that the energy curve of incandescent platinum shifts toward the shorter wave-lengths as the temperature of the source increases. This is in accordance with Professor Langley's observations.

The following optical methods gave the same result: Two platinum strips were placed one vertically above the other and heated to different temperatures. Their images were projected on the slit of a spectroscope; by narrowing the slit in that portion where the brighter image fell, the two spectra could be brought to about the same intensity, say in the red; the spectrum of the hotter strip was then found to be brighter, and to be visible further, in the violet, than that of the other. This experiment was tried both with a grating and with a prism, but the result could only be made out with difficulty. Another form of experiment was more satisfactory; the images of two incandescent platinum strips were projected side by side on a sheet of white paper by two lenses; by partially covering one of the lenses by a screen the images could be made equally bright; that of the hotter strip was not nearly as red as the other. Incandescent carbon lamps gave similar results. In all these optical experiments the strips were interchanged, so that sometimes one and sometimes the other was the hotter; the hotter always radiated a larger proportion of energy of the shorter wave-lengths.

This work will be continued next winter, and the more important determination of the distribution of energy in the spectrum of a theoretically black body will be made. It by no means follows from the above experiments that the energy curve of such a body will shift with the temperature. It is curious that a really black body, the most important in the theory of radiation, has not so far been used by experimenters.

HARRY FIELDING REID.

PHYSICAL LABORATORY,
JOHNS HOPKINS UNIVERSITY,
June 10, 1895.

THE VISIBLE SPECTRUM OF THE TRIFID NEBULA.

MISS CLERKE's paper in the May *Observatory* on "Some Anomalous Sidereal Spectra" calls attention to the discordant observations of the Trifid Nebula spectrum by the Harvard College observers in 1869–1873, by Father Secchi, and by Professor Keeler in 1890; and

I am thereby reminded that it would be well to publish my observation of that nebula made last year.

On August 3, 1894 I had occasion to examine several of the Harvard "bright *Hβ*" stars, to see if they also had bright *Hα* lines. In setting the telescope for the bright *Hβ* star *A. G. C.* 24550, the finder field also contained the Trifid Nebula and *N. G. C.* 6523, and the spectra of the nebulæ were examined.

The visible spectrum of the Trifid Nebula consists of continuous spectrum and the three usual lines at λ 5007, λ 4959 and λ 4862 (*Hβ*). These lines are easily visible, and it was at once seen that the *Hβ* line is relatively very strong in this nebula. In many parts of the nebula, especially the faint outlying portions, the *Hβ* line is brighter than λ 5007; while in other portions, especially in the denser central parts, the λ 5007 line is brighter than the *Hβ* line. The lines λ 5007 and λ 4959 have about their usual relative intensities of 3 or 4 to 1. Whether or not the continuous spectrum is unusually strong, I am unable to say; but I think it is little if any stronger than we would expect from a gaseous nebula. A safe estimate on that point could not be made on August 3, 1894, nor on the date of a recent observation, May 24, 1895, because on both occasions the spectra of the aurora borealis and of the sky light were visible, along with the spectrum of the nebula. The principal aurora line, at λ 5571, was fully as prominent as the nebular line at λ 4959.

W. W. CAMPBELL.

May 27, 1895.

NOTE ON THE SPECTRUM OF THE AURORA BOREALIS.

VISUAL observations of faint nebular and comet spectra are often interfered with by the aurora and sky spectra. It is possible to see the principal line in the aurora spectrum on almost any dark clear night. I have looked for it in all parts of the sky on at least a dozen occasions, always with success. It has occurred to me that possibly some of the faint lines photographed in nebular and comet spectra, with very long exposures, may have their origin not in the nebulæ and comets but in the aurora. At least it would seem worth while to test the question by making long exposures on some portion of the sky free from nebulous matter when an aurora is present.

W. W. CAMPBELL.

May 27, 1895.

OBSERVATIONS OF THE B BAND IN STELLAR SPECTRA.

In connection with my work on the spectrum of Mars I had occasion in July 1894, to examine the spectra of several stars with reference to the bands introduced by the absorption of our own atmosphere. The principal telluric bands seen in stellar spectra by Professor Vogel in 1873 were observed, and the additional band B was seen with extreme ease in the spectrum of every star examined — Vega, Arcturus, Altair, Alcyone. B was easy in Vega when that star was within a degree of the zenith, but less prominent than when the star was low in the sky. So far as I know, the B band had not been previously observed in stellar spectra. Since it exists in stars of widely different types, and changes its intensity as the altitudes of the stars vary, these observations support the theory of the telluric origin of the B band.

May 27, 1895. W. W. Campbell.

NOTE ON THE SPECTROSCOPIC PROOF OF THE METEORIC CONSTITUTION OF SATURN'S RINGS.

In an interesting paper communicated to the French Academy of Sciences (*C. R.* 120, 1155) M. Deslandres describes some spectroscopic observations of Saturn similar to those which I published in a previous number of this Journal, but states that he differs from me in not regarding them as strictly furnishing a proof of the meteoric structure of the ring. I do not think, however, that we really differ on this point. The objection raised by M. Deslandres, although it is worth pointing out, is purely formal, and does not affect one's conviction that the proper interpretation has been put upon the observations. I quite agree with M. Deslandres that the spectroscope is incapable of distinguishing between (1) a ring made up of an infinite number of infinitely narrow concentric rings, or even one made up of a considerable number of concentric solid rings of finite width (the number increasing with the perfection of the photograph), and (2) a ring composed of separate particles. We are, however, limited by the evidence to a choice between these alternatives. The first leads to such an artificial conception of the ring that it would be immediately rejected in favor of the second, even if all information derived from other sources should be disregarded. Admitting this outside information (and the application of spectroscopic methods in general requires such a course), there is no room whatever for doubt as to which alternative must be chosen.

From the point of view which I have taken in my previous articles, the question as to the form of a line in the spectrum of a divided ring may be regarded as follows: With a finite number of concentric solid rings the spectral lines would have a stairway-like structure, made up of a number of short lines having the equations $y=mx, y=m'x, y=m''x$, etc., in which the values of m decrease continuously from the inside to the outside of the ring. The center of each short line (or a point very near the center) would lie on the curve $y=kx^{-\frac{1}{2}}$, which would be the limiting form of the line corresponding to an indefinite increase in the number of subdivisions of the ring.

Since my first paper on this subject was printed, I have succeeded in obtaining some photographs with a slit-width of $0.^{mm}020$, on which the inclination of the lines in the spectra of the ansæ is quite easily measurable. The results agree well with theory, but I will not give the measures, as photographs recently obtained by Professor Campbell with the Lick telescope and described in the present number furnish the same results with a much greater degree of accuracy.

I may add here that my photographs of 1893, referred to in a previous paper, gave a rough determination of the mean velocity of the ring, although I considered that such a very meager result was not of sufficient interest for publication. Notwithstanding the poor quality of the photographs, the doubling of the displacement due to reflection was apparent; but the existence of such an effect seemed to be well recognized, and to have been proved experimentally by the numerous measures of the rotation of Jupiter and of the rings of Saturn made at Greenwich and published in the *Spectroscopic Results*, although the precision of these visual measures is, of course, greatly inferior to that of modern photographic methods. The necessity mentioned by M. Deslandres for regarding specularly reflected and irregularly reflected light as two different cases requiring independent proof is not quite clear to me.

JAMES E. KEELER.

PHOTOGRAPH OF THE NEBULA NEAR 42 ORIONIS MADE AT THE ASTROPHYSICAL OBSERVATORY OF CATANIA.

THIS photograph was made with the photographic equatorial of $0^m.328$ aperture with an exposure of $4^h\ 8^m$ on a Lumière plate. The enlargement reproduced in Plate VIII was obtained in two photographic cameras placed opposite one another, with a Voigtländer objective

PLATE VIII

PHOTOGRAPH OF THE NEBULA NEAR 42 ORIONIS

By A. Riccò, Catania Observatory

interposed, the illumination being derived from the diffuse light of the northern sky.

The very interesting structure of this nebula is much better shown in the photograph than in drawings. This has been demonstrated by a comparison with the remarkably fine drawings of Tempel. The great brightness of the stars in the nebula renders very difficult the perception of the details of the surrounding nebulosity.

Particularly noticeable are the nebulous streaks which radiate from the nebulous stars and seem to join together these and the other nebulosities; also the black mouth, open to the south, with its well-marked lip.

A. Riccò.

CATANIA, SICILY,
May 12, 1895.

NOTE ON THE D_3 LINE IN THE SPECTRUM OF THE CHROMOSPHERE.

IN *Nature* for June 6, 1895, Professor Runge describes the observations made by himself and Professor Paschen of the bright yellow line in the spectrum of the gas obtained from clèveite. Using a concave grating of 6.5 meters radius they found the line to be double, the wave-lengths of the bright and faint components being 5875.883 and 5876.206 respectively. Professor Rowland's value for the wave-length of the D_3 line in the spectrum of the chromosphere is 5875.982, and no mention is made in his Table of Standard Wave-lengths of any appearance of duplicity. The small probable errors of both sets of determinations justified Professor Runge in declining to accept Mr. Crooke's conclusion "that the unknown element helium causing the line D_3 to appear in the solar spectrum is identical with the gas in clèveite, *unless D_3 is shown to be double.*"

After reading this note I immediately examined the D_3 line in the spectrum of a very bright prominence which fortunately happened to be on the limb. In the fourth order of a 14438 grating the line was at once seen to have a faint companion on the less refrangible side. Measures of the distance between the lines made by my assistant Mr. Ellerman and myself gave:

June 20,	Hale,	0.354	tenth-meters
June 20,	Ellerman,	0.359	"
June 21,	Hale,	0.357	"
Mean,		0.357	

This result differs from Professor Runge's value by 0.034 tenth-meters. I regret that on account of the exceptionally cloudy and hazy weather which has since prevailed I have had no opportunity to repeat these measures.

I have satisfied myself by careful observations of the atmospheric lines considered by Bélopolsky to be the cause of the duplicity of D_3 observed by him in 1891, that this explanation properly applies only to an apparent companion to D_3 sometimes seen on the more refrangible side. Both members of the telluric pair mentioned by Bélopolsky are *below* the companion I have measured.

The observations of the duplicity of D_3 have been confirmed by Dr. Huggins and by Professor Taylor Reed.

The displacement of the line caused by the motion of the prominence in the line of sight not being accurately known it was thought best to measure the wave-length of the principal component in the chromosphere at the north and south poles of the Sun. D_3 is about 0.52 tenth-meters wide under these conditions, and on account of the unsteadiness of the spectrum at the limb the wave-length of its center cannot be measured with great accuracy. Two independent measures made by myself at the north and south poles in the fourth and second orders of the grating gave 5875.928 and 5875.920 respectively. In spite of the increased width of both components I have under favorable conditions seen traces of duplicity in the chromosphere. The presence of the faint companion on the less refrangible side would tend to increase the measured wave-length of the principal line, and this may account for the difference between Professor Runge's value and my own. This supposition is perhaps indicated by the fact that the mean of Mr. Ellerman's measures (5875.908) is somewhat smaller than my own, while faint and difficult lines are always more clearly visible to me than to him. As soon as opportunity offers I hope to repeat my determinations of the wave-length under more favorable conditions. The present results are to be regarded as preliminary.

GEORGE E. HALE.

ÉTIENNE-LÉOPOLD TROUVELOT.

E. L. TROUVELOT was born at Guyan court, Aisne, France, December 26, 1827. From his early youth he gave evidence of the pronounced taste for drawing which he subsequently found of such value in his

scientific work. His participation in the events connected with the Coup d'État caused him to be exiled to the United States in 1852. He established himself in Boston, where he acquired the friendship of Louis Agassiz. During this period he made a large number of drawings to illustrate various subjects of entomology, ornithology, etc. As an active member of the Boston Society of Natural History he published in its annals a series of papers dealing for the most part with his entomological investigations.

His interest in astronomy was awakened in 1870, when the occurrence of a remarkable series of auroras led him to purchase a small telescope. His excellent drawings of the Sun, planets and other objects soon brought him to the attention of the astronomers of Harvard College Observatory, of which Professor Winlock was then Director. At his request M. Trouvelot joined the staff of the Observatory, and continued his observations there for several years. During the latter part of his stay in America he carried on his work in his private observatory. While at Harvard many of his observations of the Sun, planets, shooting stars, auroras, etc., were published in Volumes VIII and IX of the *Annals*.

In 1878 M. Trouvelot, accompanied by his son, observed the total solar eclipse as members of Professor Harkness' party at Creston, Wyoming. Their results were published with those of the American observers in *Washington Observations* for 1876, *Appendix* III.

In 1882 M. Trouvelot was appointed Astronomer at the Astrophysical Observatory of Meudon, where he continued his investigations up to the time of his death. In 1883 he was a member of the French eclipse expedition to Caroline Island.

The long list of papers published by M. Trouvelot between 1870 and 1894 comprises over eighty-five titles. Among the more important of these publications may be mentioned the well-known series of astronomical drawings, with manual, and a monograph containing 100 drawings of Venus and Mercury. Numerous articles and drawings, including a monograph on Mars, were left in manuscript. It is interesting to know that some of these will be published by his son.

M. Trouvelot was a member of several learned societies. In recognition of his contributions to astronomy he received, among other distinctions, the Valz Prize of the French Academy of Sciences.

He died at his home in Meudon April 22, 1895.[1]

[1] For the facts embodied in the above note we are indebted to M. Georges Trouvelot.

3. STARS AND STELLAR PHOTOMETRY.

CHANDLER, S. C. Revised Supplement to Second Catalogue of Variable Stars. A. J. No. 347, 15, 81–85, 1895.

EDITOR OBS'Y. Algol. Obs'y, 18, 229–231, 1895.

GEMMILL, S. M. B. The Milky Way. Jour. B. A. A. 5, 303–305, 1895.

GRUSS, G. und W. LÁSKA. Untersuchungen über den Lichtwechsel von veränderlichen Sternen. Sirius, 23, 153–158, 1895.

GRUSS, G. and V. LÁSKA. Maxima and Minima of Variable Stars Observed in 1894–5. A. J. No. 348, 15, 91–92, 1895.

INNES, R. T. A. The Order of Brightness of First Magnitude Stars. Jour. B. A. A. 5, 402–405, 1895.

MARKWICK, E. E. Notes on the Variable Stars X and W Sagittarii. M. N. 55, 338–341, 1895.

MAUNDER, E. WALTER. Dr. Roberts' Photographs of Star-Clusters and Nebulæ. Knowl. 18, 155, 1895.

PARKHURST, HENRY M. Notes on Variable Stars, No. 8. A. J. No. 346, 15, 76–77, 1895.

SCHUR, W. Helligkeitsschätzungen von T (nova) Aurigæ. A. N. 138, 109–111, 1895.

WAUGH, W. R. Stellar Chromatics. Obs'y 18, 234, 1895.

YENDELL, PAUL S. On the Light-Curve of 103 T Andromedæ. A. J. No. 348, 15, 92–96, 1895.

YENDELL, PAUL S. Observations of Suspected Variables, 1893–5. A. J. No. 346, 15, 78–79, 1895.

YENDELL, PAUL S. Ephemeris of Variables of the Algol-Type. A. J. No. 345, 15, 72, 1895.

4. STELLAR SPECTRA, DISPLACEMENTS OF LINES AND MOTIONS IN THE LINE OF SIGHT.

ESPIN, T. E. Stars with Remarkable Spectra. A. N. 137, 369–375, 1895.

KRÜGER, FRIEDRICH. Bemerkung zu Espin "Stars with Remarkable Spectra" in A. N. 3286. A. N. 138, 111, 1895.

MONCK, W. H. S. The Spectra and Colors of Double Stars. Jour. B. A. A. 5, 416, 1895.

ORBINSKY, A. Nouvelle méthode de détermination des vitesses radiales des étoiles. A. N. 138, 9–13, 1895.

5. PLANETS, SATELLITES AND THEIR SPECTRA.

BARNARD, E. E. Micrometrical Measures of the South Polar Caps of Mars. Pop. Ast. 2, 433–443, June, 1895.

BARNARD, E. E. Micrometrical Measures of the Ball and Ring System of the Planet Saturn, and Measures of the Diameter of his Satellite Titan, Made with the 36-inch Equatorial of the Lick Observatory. M. N. 55, 367–382, 1895.

BARNARD, E. E. Filar Micrometer Measures of the Diameters of the Four Bright Satellites of Jupiter, Made with the 36-inch Equatorial of the Lick Observatory. M. N. 55, 382–391, 1895.

BOSSHARD, E. Beobachtungen bei der totalen Mondfinsterniss am 11 März 1895. Sirius 23, 152–153, 1895.

BRENNER, L. Mars-Beobachtungen an der Manora-Sternwarte nach der Opposition 1894. A. N. 137, 401–415, 1895.

BRENNER, L. Les taches polaires de Mars, d'après les observations faites a l'Observatoire Manora. Bull. Soc. Astr. France 1, 184–185, 1895.

BRENNER, L. Ueber die Ellipticität des 1. Jupiter-Mondes. A. N. 138, 77–79, 1895.

BRENNER, L. Zur Frage über die Venus-Rotation. A. N. 138, 197–200, 1895.

DESLANDRES, H. Recherches spectrales sur les anneaux de Saturne. C. R. 120, 1155–1158, 1895.

EDDIE, L. A. The Lunar Eclipse of March 11, 1895. Pop. Ast. 2, 449–452, June, 1895.

ELGER, T. GYWN. Selenographical Notes. Obs'y 18, 231–233, 271–274, 1895.

FLAMMARION, C. La circulation de l'eau dans l'atmosphère de Mars. Bull. Soc. Astr. France 1, 169–176, 1895.

FOULKES, T. H. The Planet Jupiter, as seen on the Evening of 4th March, 1895, at 7:30 P.M. Jour. B. A. A. 5, 300, 1895.

GEMMILL, S. M. B. The Visibility of the Dark Side of Venus. Jour. B. A. A. 5, 412, 1895.

GLEDHILL, JOSEPH. Observations of the Phenomena of Jupiter's Satellites and of the Transits of the Red Spot, Dark and Bright Spots, etc., during the Winter of 1894–5. M. N. 55, 391–398, 1895.

HENDERSON, ARTHUR. An Amateur's Chart of the More Permanent Markings in Jupiter. Jour. B. A. A. 5, 410, 1895.

HOLMES, EDWIN. On a Probable Cause of Small Spots in Jupiter being Represented Round. Jour. B. A. A. 5, 409, 1895.

KLEIN. Die Mondbeobachtungen auf der Sternwarte des Harvard College in Cambridge. Sirius 23, 145–152, 1895.

LYNN, W. T. The Constitution of Saturn's Rings. Obs'y 18, 235, 1895.

MAUNDER, E. WALTER. Report of the Section for the Observation of Mars. Mem. B. A. A. 2, Part 6, 157–198.

MEE, ARTHUR. Lunar Enlargements. Jour. B. A. A. 5, 414, 1895.
MEE, ARTHUR. The Progress of Selenography. Knowl. 18, 133–135, 1895.
NEWALL, H. F. Micrometer Measurements of Phobos, the Inner Satellite of Mars, during the Opposition of 1894. M. N. 55, 348–354, 1895.
SEELIGER, H. Bemerkung über die Rotation des Saturnsringes. A. N. 138, 99–101, 1895.
WILLIAMS, A. STANLEY. On the Rotation of Saturn in 1894. M. N. 55, 354–367, 1895.

6. COMETS, METEORS AND THEIR SPECTRA.

CORDER, HENRY. Report of the Section for the Observation of Meteors. Mem. B. A. A. 4, Part 1, 1–20, 1895.
DENNING, W. F. Fireball. Obs'y 18, 270, 1895.
DENNING, W. F. Meteoric Radiants near γ Pegasi. Obs'y 18, 233, 1895.
GALE, W. F. The Meteor of Sunday, March 24, 1895. Jour. B. A. A. 5, 407, 1895.
HUSSEY, W. J. Comet Rordame. Pop. Ast. 2, 445–449, June, 1895.
MONCK, W. H. S. The Perseid Radiant. Jour. B. A. A. 5, 363, 1895.
MONCK, W. H. S. Heis's Meteor Radiant T. Obs'y 5, 274, 1895.
PARKER, DAVID E. Comets and Sun-spot Maxima. Jour. B. A. A. 5, 362, 1895.

7. NEBULÆ AND THEIR SPECTRA.

MAUNDER, E. WALTER. The Great Nebecula. Knowl. 18, 156–157, 1895.
ROBERTS, ISAAC. Photograph of the Crab Nebula M. 1. Tauri. M. N. 55, 399, 1895.
ROBERTS, ISAAC. Photograph of the Nebula near 15 Monocerotis. M. N. 55, 398, 1895.

8. TERRESTRIAL PHYSICS.

SHELDON, T. S. Auroral Display of March 13. Jour. B. A. A. 5, 359, 1895.
WEYER, G. D. E. Bestimmung des Convergenzpunktes für die mittleren Richtungen der Magnetischen Meridiane. A. N. 138, 169–175, 1895.

9. EXPERIMENTAL AND THEORETICAL PHYSICS.

BROCA, A. Sur la courbure de la surface focale des systèmes optiques centrés. Jour. de Phys. 4 (3me sér.), 254–260, 1895.

FITZGERALD, G. F. On Some Considerations Showing that Maxwell's Theorem of the Equal Partition of Energy Among the Degrees of Freedom of Atoms is not Inconsistent with the Various Internal Movements Exhibited by the Spectra of Gases. Proc. R. S. 57, 312–314, 1895.

FOUSSEREAU, G. Sur l'astigmatisme des lentilles infiniment minces. Jour. de Phys. 4 (3me sér.), 260–262, 1895.

GOUY. Sur une nouvelle méthode pour produire les interférences à grande différence de marche. C. R. 120, 1039–1041, 1895.

KÖNIG, WALTER. Ueber einige Fälle achromatischer Interferenzen. Wied. Ann. 55, 1–43, 1895.

LÉPINAY, J. MACÉ DE. Mesures optiques d'étalons d'épaisseur. Ann. Chim. et Phys. 5 (7), 210–255, 1895.

LEWES, VIVIAN B. The Cause of Luminosity in the Flames of Hydrocarbon Gases. Proc. R. S. 57, 450, 1895.

MERRITT, ERNEST. Ueber den Dichroismus von Kalkspath, Quarz und Turmalin für ultrarothe Strahlen. Wied. Ann. 55, 49–64, 1895.

SCHUSTER, ARTHUR. Sur les spectres cannelés. C. R. 120, 987–989 1895.

REIFF, R. Zur Dispersionstheorie. Wied. Ann. 55, 82–94, 1895.

10. THE SPECTRA OF THE ELEMENTS.

DESLANDRES, H. Comparaison entre les spectres du gaz de la clévéite et de l'atmosphère solaire. C. R. 120, 1112–1114, 1895.

DESLANDRES, H. Découverte d'une troisème radiation permanente de l'atmosphère solaire dans le gaz de la clévéite. C. R. 120, 1331, 1895.

DESLANDRES, H. Étude spectrale des charbons du four électrique. C. R. 120, 1259, 1895.

ETARD, A. Sur l'origine moléculaire des bandes d'absorption des sels de cobalt et de chrome. C. R. 120, 1057–1060, 1895.

JANSSEN, J. Note sur la loi d'absorption des bandes du spectre de l'oxygène. C. R. 120, 1306–1310, 1895.

LOCKYER, J. NORMAN. Sur l'analyse spectrale des gaz dégagés par divers minéraux. C. R. 120, 1103–1105, 1895.

RUNGE, C. Die Wellenlängen der ultravioletten Aluminiumlinien. Wied. Ann. 55, 44–48, 1895.

RUNGE, C. On the Line Spectra of the Elements. Nat. 52, 106–108, 1895.

RUNGE, C. Terrestrial Helium (?) Nat. 52, 128, 1895.

RAMSAY, W. and J. NORMAN LOCKYER. Terrestrial Helium. Nat. 52, 55–57, 1895.

11. PHOTOGRAPHY.

WIENER, OTTO. Farbenphotographie durch Körperfarben und mechanische Farbenanpassung in der Natur. Wied. Ann. 55, 225–281, 1895.

12. INSTRUMENTS AND APPARATUS.

BROOKES, WM. R. On a Modified Form of the Cassegrain Telescope. M. N. 55, 324, 1895.

COMMON, A. A. The Brachy Telescope of Messrs. Fritsch & Forster, of Vienna. M. N. 55, 325, 1895.

DAVIES, C. D. P. Note on a Suggested Form of Equatorial Mounting for a (Modified) Newtonian Reflector. M. N. 55, 400–404, 1895.

DENNING, W. F. The Relative Powers of Large and Small Telescopes in Showing Planetary Detail. Nat. 52, 232–234, 1895.

HALLWACHS, WILHELM. Bemerkung zu einer Arbeit des Hrn. Borgesius über ein Interferenzrefractometer, etc. Wied. Ann. 55, 282–287, 1895.

LAGRANGE, CH. Observations comparées de declinometres à moments magnétiques différents. C. R. 120, 1333, 1895.

LIPPMANN, G. Sur un coelostat, ou appareil à miroir, donnant une image du Ciel immobile par rapport à la Terre. C. R. 120, 1015–1019, 1895.

PRINZ, W. Les grands instruments astronomiques et leur rendement photographique. Ciel et Terre, 6, 121–130, 153–163, 1895.

STREHL, KARL. Die Berechnung der Fernrohrobjektive im Lichte der Beugungstheorie. Sirius, 23, 159–163, 1895.

TURNER, H. H. On a Simple Apparatus for Measuring Stellar Photographs. Jour. B. A. A. 5, 400, 1895.

WOLF, MAX. Die Regulirung des Uhrwerkes eines photographischen Fernrohrs. Z. f. Instrum. 14, 203–214, 1895.

13. GENERAL ARTICLES, MEMOIRS AND SERIAL PUBLICATIONS.

BACKHOUSE, T. W. Is the Zodiacal Light Variable. Jour. B. A. A. 5, 307, 1895.

BERTHELOT. Nouvelle combinaison de l'argon; synthèse et analyse. C. R. 120, 1316–1320, 1895.

BERTHELOT. Nouvelles études sur la fluorescence de l'argon et sur sa combinaison avec les éleménts de la benzine. C. R. 120, 1386–1390, 1895.

CLÈVE. Sur la densité de l'helium. C. R. 120, 1212, 1895; Chem News 71, 283, 1895.

CORDER, HENRY. The Zodiacal Light. Jour. B. A. A. 5, 305, 1895.

GEMMILL, S. M. B. The Zodiacal Light. Jour. B. A. A. 5, 306, 360, 1895.

GOULD, B. A. Memoir of Lewis Morris Rutherfurd, 1816–1892. Nat. Acad. Sciences, April, 1895.

JANSSEN, J. Sur l'observatoire d'Astronomie physique de Meudon. C. R. 120, 1237–1240, 1895.

MARKWICK, E. E. Observations of the Zodiacal Light. Jour. B. A. A. 5, 419, 1895.

MCLEOD, HERBERT. The Bibliography of Spectroscopy. Nat. 52, 105, 1895.

RAMSAY, W. Argon and Helium in Meteoric Iron. Nat. 52, 224–225, 1895.

RAMSAY, W. Sur l'argon et l'hélium. C. R. 120, 1049, 1895.

RAYLEIGH, LORD. Argon. Nat. 52, 159–164.

SCHEINER, J. Untersuchung über die Spectra der Helleren Sterne nach Photographischen Aufnahmen. Pub. Astr. Obs. Potsdam 7, Part II, 171–335, 1895.

SPÖRER, G. Beobachtungen von Sonnenflecken in den Jahren 1885 bis 1893. Pub. Astr. Obs. Potsdam 10, 1–149, 1895.

TISSERAND, F. Bulletin du Comité International Permanent pour l'exécution photographique de la Carte du Ciel. 2, 347–458, 1895.

——— Report of the Incorporated Kew Committee for the Year Ending December 31, 1894. Proc. R. S. 57, 500–530, 1895.

——— Report of Magnetical Observations at Falmouth Observatory for the year 1894. Proc. R. S. 57, 530, 1895.

NOTICE.

The scope of THE ASTROPHYSICAL JOURNAL includes all investigations of radiant energy, whether conducted in the observatory or in the laboratory. The subjects to which special attention will be given are photographic and visual observations of the heavenly bodies (other than those pertaining to "astronomy and position"); spectroscopic, photometric, bolometric and radiometric work of all kinds; descriptions of instruments and apparatus used in such investigations; and theoretical papers bearing on any of these subjects.

In the department of *Minor Contributions and Notes* subjects may be discussed which belong to other closely related fields of investigation.

It is intended to publish in each number a bibliography of astrophysics in which will be found the titles of recently published astrophysical and spectroscopic papers. In order that this list may be as complete as possible and that current work in astrophysics may receive appropriate notice in other departments of the JOURNAL, authors are requested to send copies of all papers on these and closely allied subjects to both Editors.

Articles written in any language will be accepted for publication, but unless a wish to the contrary is expressed by the author, they will be translated into English. If a request is sent *with the manuscript* twenty-five reprint copies of each paper, bound in covers, will be furnished free of charge to the author. Additional copies may be obtained at cost price. No reprints can be sent unless a request for them is received before the JOURNAL goes to press.

The Editors do not hold themselves responsible for opinions expressed by contributors.

THE ASTROPHYSICAL JOURNAL will be published on the first day of every month except July and September. The annual subscription price for the United States, Canada and Mexico is $4.00; for other countries in the Postal Union it is 18 shillings. Correspondence relating to subscriptions and advertisements should be addressed to *The University of Chicago, University Press Division, Chicago, Ill.*

Wm. Wesley & Son, 28 Essex St., Strand, London, are sole foreign agents, and to them all European subscriptions should be addressed.

All papers for publication and correspondence relating to contributions and exchanges should be addressed to *George E. Hale, Kenwood Observatory, Chicago, Ill.*

THE

ASTROPHYSICAL JOURNAL

AN INTERNATIONAL REVIEW OF SPECTROSCOPY
AND ASTRONOMICAL PHYSICS

VOLUME II OCTOBER 1895 NUMBER 3

STARS WHOSE SPECTRA CONTAIN BOTH BRIGHT AND DARK HYDROGEN LINES.

By W. W. CAMPBELL.

IN the progress of the Henry Draper Memorial the astronomers of Harvard College Observatory have discovered an almost incredibly long list of objects having bright-line spectra. These discoveries include

Wolf-Rayet stars,
Gaseous nebulae,
New star (in Norma),
Variable stars (from bright lines in their spectra),
"Bright $H\beta$" stars.

It is impossible to overestimate the value of these additions to the previously meager number of bright-line objects. Discoveries of objects of the last-named kind have been announced in the briefest possible manner as "Bright $H\beta$" stars, and have as yet received little attention from spectroscopists. I have no hesitation in venturing the opinion that they will prove to be the most valuable objects on the above list.

My 1893–4 observations of the Wolf-Rayet star γ Argus showed that the $H\alpha$ line is quite bright in that star, whereas $H\gamma$, $H\delta$, $H\epsilon$ are dark. Of several negatives of the $H\beta$ region, two

exhibit a very faint bright band with a partially dark fine line in its center at λ 4861. The photographs show clearly that the dark $H\epsilon$ is stronger than $H\delta$, and that $H\delta$ is stronger than $H\gamma$.[1] "The photographic results obtained by Pickering at the Peruvian station of the Harvard College Observatory . . . . confirm the Lick observations as regards the violet lines, and show the ultra-violet lines $H\zeta$ to $H\iota$ to be also dark. . . . . Of course the plates do not extend to $H\alpha$."[2]

The hydrogen lines in the Wolf-Rayet star *B.D.*+43°3571 appear to have the same characteristics as those in γ Argus.[3]

At about the same time, I found that in η Tauri (Alcyone) the $H\alpha$ line is bright, with a narrow dark line on its more refrangible side. There is possibly a very narrow dark line on its less refrangible side. In February 1895, I asked Professor Schaeberle to observe the $H\alpha$ region of this spectrum. Without knowing the peculiarity of this star, he described the $H\alpha$ region exactly as I have above. It is well known that $H\beta$, $H\gamma$, $H\delta$, etc., in η Tauri are dark.

After observing γ Argus and η Tauri, I examined several of the Harvard "Bright $H\beta$" stars to see if $H\alpha$ is also bright, and found in nearly every spectrum observed that $H\alpha$ is very bright and easy. Photographs of a few of the spectra show most interesting peculiarities, which, in connection with the visual observations of the $H\alpha$ line, convinced me of the great importance of these stars. To illustrate, let us briefly consider the star φ Persei. $H\alpha$ is very bright, $H\beta$ is fairly bright, the photographs show $H\gamma$ and $H\delta$ to consist each of two narrow bright lines, faint, about four tenth-meters apart, $H\gamma$ being stronger than $H\delta$. The intensity of the hydrogen lines decreases rapidly as we approach the violet end of the spectrum. The photographs show many other interesting features, aside from the hydrogen lines.

Again, my photographs show many striking facts concerning γ Cassiopeiae. The bright hydrogen lines decrease in intensity

[1] *A. and A.*, 1894, p. 457.

[2] Frost's *Astronomical Spectroscopy*, p. 277.

[3] *A. and A.*, 1894, p. 466.

very rapidly as we go toward the violet, and are situated within broad dark hydrogen lines. A number of partially dark lines are shown at other points in the spectrum, thus confirming Professor Keeler's visual and photographic observations of dark lines in this spectrum.

The chromatic aberration of the 36-inch lenses made it impossible to study these spectra beyond $H\delta$ or $H\epsilon$. In order to gain an idea of their spectra in the ultra-violet, I asked Professor Pickering to photograph the spectrum of γ Cassiopeiae for me. In response, I received beautiful copies of his earlier photographs of γ Cassiopeiae and μ Centauri. They show conclusively the presence of a great many dark lines in both spectra; also, that the dark hydrogen lines, as they diminish in wave-length, increase in intensity, while the corresponding bright hydrogen lines which are superposed on them, decrease. These photographs contain a vast amount of information which unfortunately has not been published.

I have in the past year examined visually all the available stars of the "bright $H\beta$" type, and have secured photographs of limited regions in the spectra of several of them. While the work was in progress, the Observatory was so fortunate as to receive as a gift the 36-inch Crossley reflector. The advantages of the reflector over the 36-inch refractor in this work are so great that I shall regard the photographs now on hand as purely provisional,—hoping to undertake anew the investigation of these stars as soon as the Crossley reflector is mounted, and provided with a suitable spectrograph. In this general note I shall only record my observations of the $H\alpha$ and D_3 lines, reserving the more detailed data for a future paper.

The following list of stars contains possibly all those, up to January 1895, which should be especially investigated with reference to their bright and dark hydrogen lines. The bright lines noted in the last column were observed at Mt. Hamilton, except in the cases accredited to other observers. Unless otherwise specified, $H\beta$ (and possibly one or more succeeding hydrogen lines) has been observed to be bright by the Harvard College observers.

(*c*) The intensities of the bright lines decrease as we approach the violet.

(*d*) The intensities of the dark lines increase as we approach the violet.

The explanation of these facts is not evident. At the World's Fair Congress of Astronomy held in Chicago in 1893 I believe Professor Frost suggested a partial explanation of the bright $H\alpha$ and dark $H\gamma$, $H\delta$, $H\epsilon$, in γ Argus, on the basis that the extensive stellar atmosphere would absorb the rays of shorter wave-length proceeding from the inner (photospheric) portions of the star more powerfully than it would the waves of greater wave-length. The reasoning is this: Measurements with the spectral photometer have shown that the *general* absorption of the Sun's atmosphere is about 1.7 times as great for the violet as for the red rays; the case is doubtless similar for many of the stars, particularly for those having extensive atmospheres; if the same conditions applied to the *selective* as to the *general* absorption, at least a part of the contrast between bright $H\alpha$ and dark $H\gamma$ would be accounted for. In view of the dubiousness of the assumption that similar conditions hold for selective and general absorption, Professor Frost has not published the suggestion. It seems to me, however, that his suggestion is useful, and really points in the direction from which the true explanation will come.

Professor Scheiner says in *Die Spectralanalyse der Gestirne:*[1] "There can be nothing more natural than to assume that the stars of Class Ic, which have far more powerful atmospheres than those of Class Ia, are in a preliminary state from which they will gradually pass over into Class Ia." I heartily subscribe to that opinion. It follows logically that some at least of the stars of Class Ia were, at an earlier age, in Class Ic. How does a star of Class Ic pass over into Class Ia? If a star of Class Ic contains *one* bright hydrogen line, must *all* its hydrogen lines be bright? If a star contains *one* dark hydrogen line, must *all* its hydrogen lines be dark? If a bright-line star passes over into a dark-line star, do all the hydrogen lines change their character

[1] See Frost's translation, p. 250, last paragraph.

at the same instant? In general, the hydrogen lines probably change in the same *direction*, simultaneously; but do they change from bright lines to dark lines, or from bright lines to continuous spectrum and thence to dark lines, at the same instant? That would seem to me to be improbable. The character of a spectrum is the resultant of radiation and absorption phenomena. Stars of Class Ic seem to have atmospheres enormously extensive and very hot. Cooling and contraction cause progressive changes in their spectra. If we start with a star whose atmosphere is exceedingly extensive, and very hot throughout, our knowledge of the effects of decreasing temperatures in the outer portions of that atmosphere would lead us to expect that certain radiation phenomena should decrease, while certain absorption phenomena should increase. The conditions existing on our Sun are inadequate to explain the phenomena observed in the above stars. However, if the conditions existing on our Sun are sufficient to account for *any fractional part* of the contrast existing between the hydrogen lines in these stars, the difficulty is largely removed; for we must remember that our Sun is old, of Class IIa, whereas stars of Class Ic may safely be assigned exceedingly extensive atmospheres.

The points contained in this paper bear upon Professor Scheiner's notes (7), (8), (9) in the preface to Frost's *Astronomical Spectroscopy*.

MT. HAMILTON,
June 28, 1894.

THE ARC-SPECTRA OF THE ELEMENTS. III.

PLATINUM AND OSMIUM.

By HENRY A. ROWLAND and ROBERT R. TATNALL.

SINCE the appearance of the second part of the present paper in Vol. I., No. 2, of THE ASTROPHYSICAL JOURNAL, the ultra-violet spectra of some of the metals of the platinum group have been studied, mostly in the region between λ 3000 and λ 4600. The measurements have all been made upon plates containing second-order spectra.

Owing to the extreme difficulty experienced by the chemist in separating the members of this group from one another, the spectra upon our plates are very impure, and those of rhodium, ruthenium, and palladium, in particular, are much confused, so that the spectrum of either of these metals contains most of the principal lines of the other two. While this fact has very greatly increased the difficulty and uncertainty of identifying the lines, it has also added much to the accuracy of the measurements, since many of the heavier lines have been measured upon several different plates. The wave-lengths given in the following tables are the means of all measurements.

The heavier lines have been examined as to the probability of their occurrence in the solar spectrum, and the investigation has confirmed the existence of rhodium and palladium in the Sun. Ruthenium is doubtful, and it is most probable that there are no solar lines of appreciable intensity belonging to platinum or osmium, in this region of the spectrum. The most intense lines in the arc-spectra of rhodium and palladium correspond to extremely weak solar lines, and for this reason it seems best to defer a careful identification of these until after the completion of Rowland's Table of Solar Spectrum Wave-lengths, since a direct comparison of wave-length readings with those to be found in that table will give more certain results than can be

obtained by the use of Rowland's map, or by comparison of plates.

Beryllium.—Owing to an error in the preparation of the table of wave-lengths of beryllium lines (ASTROPHYSICAL JOURNAL, Vol. I., p. 16), the wave-lengths there given should read as follows:

2175.102	2986.177
2348.698	2986.547
2350.855	3130.556
2494.532	3131.200
2494.960	3321.218
2650.414	3321.486
2651.042	3367.720
2898.352	4572.869

PLATINUM.

(*W.-l. 3000 to 4600.*)

Wave-length	Intensity and Character	Wave-length	Intensity and Character	Wave-length	Intensity and Character	Wave-length	Intensity and Character
2998.079	15 r[1]	3252.103	4	3476.900	3	3681.229	2
3002.388	5 s	3256.038	5	3483.561	6	3683.123	3
3017.983	2 s	3259.859	3	3485.411	7	3687.554	3
3036.562	4	3261.819	2	3491.141	2 n	3700.059	5
3042.745	5 r	3268.570	3	3498.308	1	3706.667	7
3059.749	3	3282.097	3	3505.835	1 n	3717.982	2
3064.824	15 r	3283.332	2	3514.887	3	3818.827	4
3072.042	4	3283.436	2	3528.691	3	3898.886	3
3100.136	5 s	3290.370	6	3587.555	3	3900.874	4
3101.070	3	3301.996	12	3611.060	3	3911.050	2
3139.505	7	3315.182	5	3621.812	2	3923.106	2
3156.683	6	3323.921	4	3627.226	1	3925.486	4
3200.830	6	3344.037	3	3628.272	10 s	3948.539	5
3204.161	8	3367.135	4	3629.017	5	3959.170	2
3212.493	1	3408.277		3638.944	8 s	3966.504	12
3227.290	1	3426.880		3643.313	8	3996.722	3
3230.406	4	3428.110		3659.564	2	4012.016	2
3233.541	4	3432.023		3663.242	3	4047.796	4
3240.323	3	3454.285	2	3672.142	10 s	4054.925	2
3250.475	3	3464.080	1 n	3674.191	9 s	4066.094	2

[1] In all the tables,
r indicates *reversed*,
s indicates *sharp*,
n indicates *hazy* or *nebulous*.

PLATINUM.—*Continued.*

Wave-length	Intensity and Character	Wave-length	Intensity and Character	Wave-length	Intensity and Character	Wave-length	Intensity and Character
4069.850	2	4192.589	5	4340.002	2	4391.996	10
4081.627	2	4205.015	4	4346.983	7	4442.723	20 s
4092.421	2	4227.523	4	4358.025	4	4445.713	5
4095.030	4	4252.229	3	4370.483	10	4498.930	4
4118.838	10 s	4288.217	2	4379.184	8	4552.594	12
4132.544	3	4327.230	10	4382.243	3	4554.828	12
4164.722	6						

OSMIUM.

(*W.-l. 3000 to 4600.*)

Wave-length	Intensity and Character	Wave-length	Intensity and Character	Wave-length	Intensity and Character	Wave-length	Intensity and Character
3018.155	5	3930.138	5	4053.407	2	4251.331	1
3041.023	3	3931.660	3	4055.641	2	4252.690	1
3058.766	5	3938.739	6	4066.464	2	4260.993	25
3077.841	3	3939.708	4	4066.848	15	4264.903	3
3156.384	5	3949.921	4	4071.008	5	4269.521	2
3232.195	3	3952.911	3	4071.162	3	4269.767	4
3268.078	5	3960.653	3	4071.716	5	4270.945	2
3301.708	8	3961.163	5	4073.763	5	4275.064	2
3336.301	3	3963.777	10	4074.834	5	4277.302	3
3370.730	3	3965.112	3	4088.593	2	4281.529	1
3402.001	2	3969.835	5	4090.922	3	4286.056	4
3402.654	1	3975.598	3	4091.977	8	4294.113	10
3445.699	2	3977.391	10	4097.004	3	4296.383	3
3449.346	3	3979.521	2	4097.090	3	4297.538	1
3504.815	3	3988.343	4	4098.264	2	4299.856	1
3598.264	3	3988.783	2	4100.446	4	4305.440	1
3640.484	3	3991.640	2	4112.185	12	4309.041	2
3654.639	2	3995.096	2	4124.762	4	4311.560	10
3657.053	3	3996.972	2	4129.124	8	4317.743	1
3671.040	3	3999.103	2	4135.945	20	4319.502	2
3790.244	3	4003.652	5	4138.013	3	4326.416	5
3794.054	2	4004.193	5	4152.455	10	4328.840	9
3876.971	3	4005.327	7	4158.948	2	4338.919	3
3895.023	2	4015.211	2	4172.710	4	4342.678	1
3895.305	3	4018.430	5	4173.386	8	4351.691	3
3900.527	4	4033.095	2	4175.781	·5	4354.626	2
3901.843	5	4035.250	2	4190.052	4	4358.153	2
3918.888	2	4036.634	2	4201.528	3	4358.304	2
3919.107	2	4038.017	3	4212.007	6	4365.837	8
3925.244	3	4038.782	2	4218.991	1	4370.824	4
3926.916	3	4042.073	6	4226.675	3	4377.068	1
3928.554	3	4048.197	4	4233.613	4	4391.242	2
3928.681	3	4051.580	2	4241.679	1	4395.042	9

OSMIUM.—*Continued.*

Wave-length	Intensity and Character	Wave-length	Intensity and Character	Wave-length	Intensity and Character	Wave-length	Intensity and Character
4397.427	3	4437.257	2	4466.121	1	4548.827	2
4400.747	2	4439.810	2	4479.976	2	4550.571	4
4402.904	4	4445.850	1	4484.930	3	4551.463	3
4404.378	2	4447.520	5	4488.766	2	4616.944	1
4420.633	20	4459.658	1	4525.035	1		
4432.582	3	4459.781	2	4529.842	1		
4436.488	5	4462.470	1	4540.087	1		

PRELIMINARY TABLE OF SOLAR SPECTRUM WAVE-LENGTHS. VIII.

By HENRY A. ROWLAND.

Wave-length	Substance	Intensity and Character	Wave-length	Substance	Intensity and Character
5148.410	Fe	3	5157.376		000
5148.627		0000	5157.783	-,C	000
5148.851		000	5157.915	C,-	000
5149.013		000	5158.152		00
5149.267	C,-	000	5158.701	C	000
5149.392		000	5158.832	C	0000
5149.512		0000	5159.026		0000 N
5149.685		0000 N	5159.231 s	Fe	2
5149.964		000	5159.452		0000
5150.363		00	5159.634	C,-	000
5150.525		0000	5159.776	C	0000
5150.736	-,C	000	5159.946		0000
5150.842	C?	0000	5160.138		000
5151.020 s	Fe	4	5160.419	C,-	00 N
5151.112	Mn	000	5160.554		0000
5151.344		0000 N	5161.006		0000 N
5151.628		0000 N	5161.194	C,-	000
5152.087	Fe	3	5161.353	C,-	000
5152.361	Ti	0	5161.849	C	0000
5152.700		0000	5161.910	C,-	000
5153.129	-C?	000	5162.153	C?	0000
5153.337	C	0000	5162.449 s	Fe, C	5
5153.414	Fe	1	5162.690	C	0000
5153.584		00	5162.902		0000
5153.687		00	5163.074	C,-	000
5153.848		000	5163.200	C,-	000
5153.985		0000 Nd?	5163.327		0000
5154.244 s	Ti-Co	2	5163.585	C,-	000
5154.505	C	0000	5163.756	C,-	000
5154.579		000	5164.007		0000
5154.913		0000	5164.172	C	0000
5155.028		0000	5164.404	C,-	000
5155.303	Ni	1	5164.562		0000
5155.694	C,-	000	5164.724	Fe?	1
5155.935 s	Ni	2	5164.855	C	0000
5156.239		000	5164.950	C	0000
5156.530		000	5165.080	C,-	000
5156.728	C	0000	5165.209	C	0000
5156.823	C,-	00 N	5165.297	C	0000
5157.163		0000	5165.416[1]	C	0000

[1] Head of carbon band.

Wave-length	Substance	Intensity and Character	Wave-length	Substance	Intensity and Character
5165.588 s	Fe	2	5180.747		000
5165.746		0000	5181.041		0000
5166.133		0000	5181.334		000
5166.454	Cr-Fe	3	5181.498		00
b_4 5167.497 s	Mg	15	5181.719		0000 N
b_4 5167.678 s	Fe	5	5182.010		000
5167.885		00	5182.123		0000
5168.123		0000	5182.518		0000
5168.360		000 Nd?	5182.761		0000
5168.832	Ni	1	5182.907		000
b_3 5169.069 s	Fe	3	b_1 5183.791 s	Mg	30
b_3 5169.220 s	Fe	4	5184.364		000
5169.469		00	5184.445	Fe	2
5169.664		0000	5184.738	Fe, Ni, Cr	1
5169.871		0000	5184.998		0000
5170.271		0000	5185.201		0000
5170.655		0000	5186.073	Ti	2
5170.767		000	5186.274		0000
5170.937	Fe	0	5186.497	Fe	000 N
5171.192		0000	5186.718		000
5171.778 s	Fe	6	5187.432		0000
5172.386		00	5187.620		000
b_2 5172.856 s	Mg	20	5188.004		0000
5173.499		0000	5188.079	Fe	1
5173.652		000	5188.227		0000
5173.917 s	Ti	2	5188.409		0000
5174.077		0000	5188.571		0000
5174.203		000	5188.863 s	Ti	2
5174.595		000 N	5189.018 s	Ca	3
5175.099		000	5189.300		000
5175.423		000	5189.503		0000
5175.575		000	5189.744		000
5175.923		000 Nd?	5189.948		000
5176.191	Co	000	5191.244		000
5176.305		000	5191.629	Fe	4
5176.735	Ni	1	5191.768		000
5176.954	V	000	5191.911		0000
5177.179		0000 N	5192.033		0000
5177.410	Fe	0	5192.155	Cr	00
5177.577	Co	00	5192.523	Fe	5
5177.784		0000	5192.659		000
5177.979		0000	5192.785		000
5178.156		0000	5192.924		0000 N
5178.644		000	5193.139 s	Ti	2
5178.970		00	5193.339		0000
5179.293		000	5193.500		0000
5179.695		0000	5193.669	Cr	000
5179.958		000	5194.027		0000
5180.233	Fe	1	5194.216	Ti	000
5180.572		000	5195.113	Fe	4

Wave-length	Substance	Intensity and Character	Wave-length	Substance	Intensity and Character
5195.647	Fe	2	5210.555 s	Ti	3
5196.227	Fe	1	5211.015		000
5196.434		0000 N	5211.106		0000
5196.613	Cr	0	5211.367		000
5196.741	Mn	00	5211.700	Fe	00
5197.332	Ni, Mn	00	5211.976		0000
5197.540		0000 N	5212.398		000 N
5197.743		2	5212.503		0000
5197.954		0000	5212.859		000 Nd?
5198.108		0	5213.155		0000
5198.512		0000	5213.515		000
5198.888 s	Fe	3	5213.977		000
5199.033		0000	5214.286	Cr	00
5199.766		000	5214.781		00
5199.879		000	5215.353 s	Fe	3
5200.355	Cr	00	5215.737		000 N
5200.590	V	0	5216.437	Fe	3
5200.989		0000 N	5216.648		00
5201.260	Ti	000	5217.552 s	Fe	3
5201.458		0000 N	5217.836		0000 N
5201.771		0000 N	5218.030		0000
5202.125		000	5218.085	Fe	0
5202.249		000	5218.369	Fe	1
5202.439 } s	Fe?	2	5218.675		0000
5202.516 } s	Fe	4	5219.186		0000
5202.945		0000	5219.875	Ti	0
5203.118		0000	5220.045		0000
5203.658		000	5220.250		000
5204.414		0000	5220.358	Ni	0
5204.680 } s	Cr	5	5221.078		000
5204.768 } s	Fe	3	5221.197	Cr	00
5205.113		0000	5221.928	Cr	0
5205.467		0000	5222.556	Cr	00
5205.897	Y	0	5222.849	Ti, Cr	00
5206.215	Cr-Ti	5	5223.033		0000 N
5206.372		00	5223.351	Fe	0
5206.712		000	5223.529	Ti	0000
5206.986		0000	5223.705		0000
5207.259		0000	5223.791		000
5207.791		000 N	5224.062		0000 Nd?
5208.038		0000	5224.239	Cr	000 N
5208.111	Ti	00	5224.471	Ti	0
5208.276		000	5224.712	Ti, Cr	00
5208.506	Cr	5	5224.885		0000
5208.776	Fe	2	5225.101	Cr	0
5209.779 x		0000	5225.198	Cr, Ti, Fe	00
5209.949		0000	5225.513		0000
5210.059		000	5225.695 s	Fe	2
5210.204		0000	5225.877		0000
5210.421		0000	5225.974	Cr	000

Wave-length	Substance	Intensity and Character	Wave-length	Substance	Intensity and Character
5226.224		0000	5242.658 s	Fe	2
5226.364		0000	5243.346		000
5226.549		0000	5243.526	Cr	00
5226.707	Ti-	2	5243.635		0000
5227.043	Fe-Cr	3	5243.946	Fe	1
5227.362	Fe	5 d?	5244.702		000 N
5227.639		0000	5245.118		0000
5227.902		000	5245.801		0000
5228.049		0000	5245.901		0000
5228.268	Cr	000	5246.170		0000
5228.546		1	5246.310		0000
5228.727		0000	5246.733		0000
5230.030 s	Fe	4	5246.946		000
5230.225		0000	5247.229	Fe	1
5230.382	Co, Cr	00	5247.466	Ti	000
5230.554		0000	5247.737	Cr	2
5230.867		000 N	5248.091	Co	000 N
5231.151		0000	5248.550		000
5231.578		000	5249.163		0000
5232.681		000	5249.279	Fe	00
5233.005		0000	5249.593		0000
5233.122 s	Fe	7	5249.751		0000
5234.022		0000	5250.193		0000
5234.255		0000	5250.385 s	Fe	2
5234.380		000	5250.602		0000 N
5234.603		0000 N	5250.817 s	Fe	3
5234.791		2	5251.085		0000 N
5235.040		0000	5252.146	Fe	0
5235.202		0000	5252.276	Ti	000
5235.353	Co	000	5253.205		00
5235.557	Fe	1	5253.421		0000
5235.672	Ni	00	5253.633 s	Fe	2
5236.373		0	5253.854		0000 N
5236.549		000	5254.132		0000 N
5237.254		0000	5254.830		0000
5237.493	Cr?	1	5255.121	Fe	3
5238.011		0000	5255.295	Cr	0
5238.416		0000	5255.492	Mn	0 d?
5238.742	Ti	000 N	5255.687		0000
5239.137	Cr	00	5255.831		000
5239.992		1	5255.912		000
5240.310		0000	5255.973	Ti	0000
5240.523		0000	5257.100	Sr?	00
5240.639		000	5257.246		0000 N
5241.040		000	5257.529		0000 N
5241.347		0000	5257.814		0
5241.624		0000	5258.000		000 N
5242.094		0000	5259.261		0000 N
5242.238		000	5259.660		000 N
5242.450		0000 N	5259.912		0000

Wave-length	Substance	Intensity and Character	Wave-length	Substance	Intensity and Character
5260.142		000	5270.235		000
5260.438		0000	5270.438 s	Ca	3
5260.561 s	Ca	0	5270.558 s	Fe	4
5260.840		0000	5271.228		00
5260.945		0000	5271.464		00
5261.669		0000	5271.796		000
5261.876 s	Ca-Cr	3	5272.017		0000
5262.130		000 N d?	5272.171	Cr	00
5262.321 s		1	5272.436	Fe	000
5262.419 s	Ca	3	5272.574		000
5262.631		0000	5273.339 s	Fe	3
5262.791		000	5273.558 s	Fe-Cr	2
5263.056		00	5273.770		0000 N
5263.239		0000	5274.408		00
5263.486	Fe	4	5274.575		000
5263.669	Ti	000	5274.702		00
5263.890		000	5274.959		0000 N
5264.038	Fe	0	5275.148		0
5264.163		0000	5275.340	Cr	00
5264.329 s	Cr	4	5275.454		1
5264.415 s	Ca	3	5275.641		0000 N
5264.570		000	5275.762		0000
5264.759		000 N d?	5275.926	Cr	1
5264.976		0	5276.169 } s	Fe?	3
5265.146		0000 N	5276.237 } s	-Cr?	2
5265.321	Cr	00	5276.344	Co	000
5265.423		000	5276.612		0000 N
5265.591	Co	0000	5277.047		000
5265.729 s	Ca	3	5277.480		00
5265.893 s	Ni-Cr	2	5278.420		00 N
5266.141	Ti	0	5278.747		0000
5266.246		000 N	5278.960		00
5266.482		000	5279.130		000
5266.639		000	5279.349		0000
5266.738 s	Fe	6	5279.481		000
5267.203		000	5279.843		00
5267.273		000	5280.048		0
5267.447		00	5280.239		00
5267.658		0000	5280.458	Cr	000
5267.825		000 N	5280.540	Fe	1
5268.355		0000	5280.799	Co	00
5268.515	Ni	0	5281.099		0000Nd?
5268.670		000	5281.333		000
5268.784	Co	00	5281.491		00 N
5268.972		0000	5281.681		000 N
5269.125		000	5281.844		000
5269.586		00 N	5281.971 s	Fe	5
5269.723 s	Fe	8 d?	5282.339		0000
5269.863		000 N	5282.576	Ti	00
5270.076		0000	5283.331		0000

Wave-length	Substance	Intensity and Character	Wave-length	Substance	Intensity and Character
5283.613	Ti, Co	00	5300.152		00
5283.802 s	Fe	6	5300.578		000
5284.087		000	5300.735		0000
5284.281	Ti	1	5300.929 s	Cr	2
5284.453		0000	5301.094		0000
5284.601	Fe, Ti	00	5301.218	Co	00
5284.787		00	5301.485		000
5284.940		0000	5301.666		0000
5285.300	Ni	0	5302.048		000
5285.431		000	5302.225		000
5285.557		0000	5302.480	Fe	5
5285.819		000	5302.738		0000
5287.351	Cr	000	5302.829		000
5287.741		0000 N	5303.122		0000
5287.958		000	5303.401		0
5288.389		000	5303.591		000
5288.548		0000	5303.738		000
5288.705 s	Fe	2	5304.018		00
5288.974		000	5304.355	Cr	0
5289.446		000	5304.610		0000
5289.676		000	5304.735		000
5289.988		000	5305.167		000 d
5290.984		000	5305.602		0000
5291.820		000 N	5306.040		0
5292.388	Awv?	000 N	5306.331		0000
5292.569		0000	5306.665		000
5292.762	Fe	0	5307.039		0000
5293.044		000	5307.140		0000
5293.210	Awv?	00	5307.402		000
5293.341	Awv?	00	5307.541 s	Fe	3
5293.543		000	5308.385		0000
5293.946		0000	5308.599		0
5294.134	Fe	0	5308.863		00
5294.290		0000	5309.064		000
5294.579		0000	5309.357		0000
5294.726		00	5309.630		0000
5295.241		0000	5310.227		0000
5295.485	Fe	0	5310.417		000
5295.955	Awv?	00	5310.659		000
5296.243		000	5310.866		0
5296.657		0000	5311.102		000
5296.872 s	Cr	3	5311.310		0000
5297.407	Cr, Ti	000	5311.650		000
5297.555	Cr	2	5311.804		000
5298.194	Cr	1	5311.962		000
5298.455	Cr	4	5312.435		000
5298.672	Ti	0	5312.666		000
5298.957	Fe	0	5312.835		00
5299.005		0000	5313.031	Cr	0
5299.804		0000	5313.253		000

Wave-length	Substance	Intensity and Character	Wave-length	Substance	Intensity and Charpcter
5313.422		000 N	5328.747	Fe	2
5313.587	Co	000	5328.919		0000
5313.758		1	5329.096		000 d?
5313.931		0000	5329.329	Cr	3
5314.447		0000 N	5329.975	Cr	0
5314.916		000 N	5330.179	Fe	2
5315.103		000	5330.748		000
5315.252	Fe	1	5331.377		0000
5315.960		000 N	5331.641	Co	00 d
5316.390		0000	5331.944		000
5316.572		0000	5332.545		000
5316.790 s	Fe	4	5332.849	Co, Fe	1
5316.906 } s	Co	0	5333.089 s	Fe	4
5316.958 }		2	5333.334		000
5317.249		0000	5333.432		000
5317.724		00 N d?	5333.832	Co	000
5318.215		0000	5333.949		000
5318.534		00 N	5334.140		0000
5318.777		0000	5334.403		000
5318.955	Cr, Fe	0	5334.520		000
5319.225		00	5335.050	Co	1
5319.392		000	5335.147		0000
5319.502		000	5335.547		0000
5319.999		00	5335.770		0000
5320.220	Fe	0	5336.356		000
5321.005		000 N	5336.478		0000
5321.293	Fe	2	5336.660		0000
5321.976	Mn	000 N d?	5336.792		0000 N
5322.227	Fe	3	5336.974	Ti,-	4
5322.994		000	5337.910		0
5323.687		0000	5337.946		00
5323.971		0000	5338.517		00 N
5324.274		0000	5338.727		000
5324.373 s	Fe	7	5338.927		000
5324.881		0000	5339.403		000
5325.460	Co	00	5339.609	Co	00
5325.569		0000	5339.719		000
5325.738		2	5339.878		0000
5326.139		000 N	5340.121	Fe	6
5326.331	Fe	1	5340.375	Co	00
5326.535		0000	5340.639	Cr	0
5326.682		0000	5340.852		000
5327.003		00	5340.962		0000
5327.445		000	5341.213	Fe	7
5327.917		0000	5341.337	Mn	1
5328.074		00	5341.514		00
5328.236	Fe	8 d?	5341.670		000
5328.367		000	5341.933		0000
5328.515	Cr	2	5342.055		0000
5328.696	Fe	2	5342.276		000

Wave-length	Substance	Intensity and Character	Wave-length	Substance	Intensity and Character
5342.409		000	5357.383		00
5342.713		000 d	5358.306		00
5342.890	Co	1	5358.476		0000
5343.148		0000	5358.668		0000
5343.310		0000	5358.853		000
5343.411		0000	5359.127		000 N
5343.570	Co	0	5359.389	Co	00
5343.622	Fe	2	5359.714		000
5344.646	Mn	00	5359.910		000
5344.767		000 N	5360.330		0000 N
5344.942	Cr	00	5360.665		0000
5345.729		000	5360.903		0000
5345.991	Cr	5	5361.115		0000
5346.274		00	5361.343		0000
5346.523		000	5361.565		000
5346.731	Fe	0	5361.697		000
5347.004		00	5361.813 s		1
5347.156		0000	5362.365		0000
5347.277		000	5362.944 s	Fe, Co	1
5347.500		0000	5363.058 s		3
5347.712		00	5364.359		000
5347.898		00	5364.615		000
5348.259		000	5365.069	Fe	5
5348.511	Cr	4	5365.416		0000
5348.947		000	5365.596	Fe	3
5349.283		000	5366.616		00
5349.473		0000	5366.827		000
5349.653 s	Ca	4	5366.950		000
5349.928	Fe	1	5367 669 s	Fe	6
5350.059	Mn	00	5367.962		0000
5350.281		00	5368.083		0000
5350.547		00	5368.311		0000
5350.688		0000 N	5368.490		000
5350.976		0000 N d?	5368.626		000
5351.261	Ti	00	5368.741		000
5351.832		0000	5369.044		0000
5352.024		000	5369.125		0000
5352.234	Co	1	5369.348		0000 N
5352.421		0000	5369.550		000
5352.591		000	5369.782	Cc-Ti	1
5353.178		000	5370.166 s	Fe	6
5353.350		0000 N	5370.522	Cr	00 N
5353.571 s	Fe, Cr	3	5371.528	Ni	1
5353.702	Co	0	5371.656 } s	Cr?	4
5354.714		0000	5371.734 }	Fe	3
5354.916		0000	5372.121		000
5355.088		0000	5373.839		0000 N
5355.921		00	5373.905	Fe, Cr	2
5356.270		000	5374.142		0000
5357.178		000	5374.349		000

SEVEN NEW VARIABLE STARS.[1]

By M. FLEMING.

SINCE the discovery of eleven new variable stars at this Observatory was communicated to THE ASTROPHYSICAL JOURNAL in a letter dated April 9, 1895, seven other variables have been discovered here. Five of them were found in the examination of the photographs of stellar spectra taken at Cambridge and at the Arequipa Station in Peru, forming part of the work of the Henry Draper Memorial. These stars have spectra of the third type, having also the hydrogen lines bright. This peculiarity led to their being suspected of variability, since many known variable stars of long period possess this class of spectrum. Two were found from a comparison of the photographic chart plates with the maps of the *Durchmusterung*, while selecting and checking the selection of the faint stars for standards of stellar magnitudes. The variables are enumerated in the following table which gives the constellation, the designation, the approximate right ascension and declination for 1900, the catalogue magnitude of the star and the magnitudes when brightest and when faintest, as derived from the photographs:

Constellation	Designation	R. A. 1900	Dec. 1900	Mag.	Mag. Br.	Mag. Ft.
Eridanus....	*C.D.M.*—24°1960	$3^h\ 51^m.0$	−24° 20′	8.6	7.2	11.0
Orion.....	*B.D.* +0° 939	5 0 .2	+ 1 2	6.0	8.8	10.6
Puppis.....	*Z.C.* 7^h3056	7 42 .6	−41 57	9½	9.8	12.1
Cancer	.....	9 4 .0	+25 39	—	9.6	<13.5
Hydra.....	*S.D.* − 7°2873	9 37 .7	− 7 38	9.0	9.7	10.6
Libra.....	*S.D.* −14°4228	15 27 .7	−14 59	9.4	8.5	<12.3
Ursa Minor..	.....	15 33 .3	+78 58	—	8.4	11.4

—Eridani. *C.D.M.* −24° 1960. The magnitudes of this star as derived from photographs taken on September 6, October 20,

[1] Communicated by Edward C. Pickering, Director of the Harvard College Observatory.

November 6, 1889; September 13, 1890; January 30, February 1, October 22, December 17, 1891; December 14, 1892; November 18, November 20, 1893; August 13, August 14, September 22, October 27, November 6, November 10, November 16, and December 13, 1894, are 9.8, 7.2, 7.7; 9.1; 9.9, 9.8?, 9.0, 7.9; <9.8; 9.8, 9.6; 8.4, 8.3, 8.0, <8.4, 9.4, 9.8, 9.8, and 11.0 respectively.

—Orionis. *B.D.*+0°939. The variation in the light of this star was discovered by Miss E. F. Leland. It presents an especial interest on account of the apparent length of its period. It was bright in 1879 and again in 1891, and faint in the intermediate years. As, however, all the observations were made at about the same part of the year further observations are required, as it is still possible that the period may be a little less or a little greater than one year. Of the variability there can be no doubt. While it is proved by the photographs, the visual observations alone are sufficient to establish it. Thus four of the excellent Potsdam observations give the results 6.08, 5.99, 5.87, and 6.38. No one who looked at it last winter could doubt that it was fainter than the sixth magnitude. In fact the meridian photometer on six nights gives the results 7.10, 7.23, 7.02, 7.22, 7.13, and 7.22. In 1880 the meridian photometer gives its magnitude as 5.8; in 1881, 6.7; in 1882, 6.8; in 1883, 6.6; in 1885, 6.8; in 1894, 6.8; and in 1895, 7.2. Its magnitudes as derived from photographs taken on November 9, 1885; February 29, September 28, 1888; December 29, 1890; January 26, January 26, December 11, December 11, 1891; January 4, January 8, January 21, December 20, December 22, December 28, December 29, 1892; September 20, October 2, and November 26, 1893 are 10.0; 9.8, 9.6; 9.0; 8.9, 8.8, 10.0, 10.0; 9.8, 9.5, 9.6, 10.3, 10.4, 10.2, 10.3; 10.6, 10.4, and 10.1 respectively.

—Puppis. *Z.C.* 7^h 3056. *C.D.M.* −41° 3363. The magnitudes of this star as derived from photographs taken on October 3, October 22, November 13, 1889; September 27, September 27, October 24, October 24, October 26, October 26, 1893; April 18, October 19, and November 24, 1894 are < 10.6, < 10.8, 9.8;

11.8, 12.1, 10.4, 10.0, 10.0, 9.9; 10.8, 10.7, and 9.9 respectively.

—Cancri. R.A. $9^h\,4^m.0$; Dec. $+25°\,39'$. The magnitudes of this star as derived from photographs taken on December 6, 1889; December 7, December 9, December 14, December 18, December 29, 1890; March 26, 1891; February 15, March 7, April 9, 1892; March 12, March 18, March 31, April 5, November 22, 1893; January 2, January 25, March 30, November 15, 1894; January 23, March 5, May 9, and May 23, 1895, are 11.5; 10.2, 10.2, 10.4, 10.7, 10.7; 11.6; 12.2, 12.8, <13.5; 11.9, 12.3, <12.0, <12.1, 10.6; 9.6, 10.0, 12.0, 11.8; 9.8, 10.0, 12,0, and <12.1 respectively.

—Sextantis. *S.D.* $-7°2873$. The variation in the light of this star was discovered by Miss L. D. Wells. Its magnitude as derived from photographs taken on January 24, April 9, 1888; December 9, 1889; March 25, 1891; February 15, March 6, March, 14, March 30, 1892; February 24, March 15, November 22, 1893; April 19, December 17, 1894; February 11, February 13, April 10, April 10, April 11, April 11, April 11, April 16, April 16, April 17, April 17, April 18, April 18, April 20, April 23, April 23, April 25, April 25, May 1, May 1, May 2, May 3, May 3, May 6, May 7, May 7, May 9, and May 23, 1895 are 9.8, 9.8; 10.4; 10.6; 9.9, 9.8, 9.9, 9.8; 9.9, 9.9, 9.9; 10.0, 9.9; 9.8, 9,7, 9.9, 10.1, 9.7, 9.9, 9.9, 9.9, 9.9, 9.9, 9.9, 9.9, 9.9, 10.2, 10.0, 9.9, 10.1, 10.0, 10.0, 10.0, 10.2, 10.3, 10.2, 10.2, 9.9, 10.2, 10.4, and 10.4 respectively. These results were confirmed by measures made by Mr. O. C. Wendell with a polarization photometer attached to the 15-inch equatorial.

—Libræ. *S.D.* $-14°\,4228$. The magnitudes of this star as derived from photographs taken on February 28, May 17, 1888; July 18, 1890; May 16, May 16, June 3, June 23, June 23, 1891; May 10, May 10, May 10, May 11, 1892; May 7, May 7, July 22, July 27, 1893; May 13, June 14, June 17, June 18, and June 20, 1895 are <12.3, 10.8; <11.4; <11.8, <11.0, <11.5, <11.8, <11.9; <10.8, <10.6, <10.4, <8.9; <11.8, <11.7, 10.6, 10.7; 8.9, 8.5, 8.5, 8.6, and 8.7 respectively.

—Ursæ Minoris. R.A. $15^h\,33^m.3$; Dec. $+78°\,58'$. The mag-

nitudes of this star as derived from photographs taken on March 9, August 28, September 29, October 1, November 10, 1890; July 16, 1891; April 11, 1892; August 15, August 15, August 26, 1893; August 17, October 17, November 10, November 12, November 12, December 29, 1894; January 1, January 2, April 23, April 25, May 1, May 2, May 3, May 6, May 7, May 16, May 22, May 23, May 29, June 7, June 14, June 17, and June 18, 1895 are 11.4, 8.4, 8.6, 8.4, 9.3; 8.4; 9.3; 9.8, 9.8, 10.3; 11.2, 11.3, 10.6, 10.7, 10.5, 8.9; 8.9, 8.8, 9.2, 9.4, 9.4, 9.2, 9.03, 9.4, 9.4, 9.4, 9.8, 9.7, 10.0, 10.2, 10.4, 10.4 and 10.4 respectively.

The photographs of the above variables have been examined, and the variability of the stars confirmed by Professor E. C. Pickering.

HARVARD COLLEGE OBSERVATORY,
Cambridge, Mass., July 5, 1895.

ON THE EXISTENCE OF LAW IN THE SPECTRA OF SOLID BODIES, AND ON A NEW DETERMINATION OF THE TEMPERATURE OF THE SUN.

By F. PASCHEN.

IN THE ASTROPHYSICAL JOURNAL for June 1895 there is an article by Mr. H. Ebert, in which the temperature of the Sun is determined by an extrapolation based on Langley's energy curves for heated solid bodies, and a relation between the wave-lengths of the maxima and the temperature which has been deduced from these curves by Mr. H. Rubens.[1] The wave-length of the maximum ordinate of the energy curve for the normal solar spectrum is also given. According to Mr. Langley[2] it is about $0^{\mu}.5$.

I will not enter into the discussion of valence charges of atoms and the constitution of the Sun which is found in this article, but will confine myself to a consideration of the experimental basis which has been mentioned, *i. e.*, the law ascribed to Rubens.

Many previous attempts to deduce a similar law from the observations of Langley have been made. H. F. Weber,[3] M. W. Michelson,[4] R. von Kövesligethy,[5] Lord Rayleigh[6] and others have concerned themselves with the same question. The formula of Michelson is exactly the same as that of Rubens, but, although it was published some years ago, it seems to have been overlooked by Rubens as well as by Ebert. In a number of the articles that I have mentioned a value of the solar temperature has been determined in quite the same manner as by Ebert, and with essentially the same result (see for example the article

[1] H. RUBENS, *Wied. Ann*, 53, 284. 1894.

[2] S. P. LANGLEY, *Researches on Solar Heat*. Washington, 1884.

[3] H. F. WEBER, *Sitzungsber. Berlin*, 1888, II., 933.

[4] M. W. MICHELSON, *Jour. de Phys.*, II., 6, 467, 1887.

[5] R. v. KÖVESLIGETHY, *Grundzüge einer theoret. Spectralanalyse*, Halle.

[6] LORD RAYLEIGH, *Phil. Mag.*, 27, 460, 1889.

by Michelson), although this fact also seems to have been unnoticed by him.

In the application of such methods it is first of all necessary that the law in question, which is to be used in an extrapolation extensive enough to reach the temperature of the Sun, should hold accurately within the limits of observation. This condition has not been met hitherto by any means,—certainly not in the table of Rubens. Most of the computers, who, like Rubens, have used these data, have therefore laid stress on the necessity of further experimental work.

It may be observed, in this connection, that certain precautions, which it is not permissible to neglect, have been omitted in evaluating Langley's curves. For example, neither Michelson, Kövesligethy, nor Rubens has transformed Langley's prismatic energy curves into the corresponding curves for the normal spectrum. But it is here not sufficient to merely introduce the wave-lengths in place of the deviations recorded by the prism; the ordinates, representing the galvanometer deflections, must be reduced to those which would have been obtained if in every region of the spectrum the same range of wave-lengths fell on the bolometer strip. On account of the characteristic dispersion of a prism the effect of this reduction is very sensibly to displace the maximum of the energy curve for the long waves in question, toward the side of longer wave-lengths. If Langley's curves are treated in this manner, as they were in some cases by Langley himself, by means of the dispersion of rock salt which he determined, and which long ago permitted the transformation to be effected with fairly close approximation as far as the region $5^{\mu}.3$, Michelson's relation

$$\lambda_{max.} \times \sqrt{\text{abs. temp.}} = \text{const.}$$

does not hold even approximately. Still other, though less fatal, oversights may be found in the computations of the gentlemen I have referred to.

As I believe that it is in the highest degree important to make a series of elaborate and exact measurements in the spectra of solid bodies, in order to provide a secure experimental basis

for theoretical investigations, I have been engaged in researches of this kind for over two years.

The first thing to be considered is to find a body which reflects light of all wave-lengths as little as possible, or as uniformly as possible, and which thus affords the closest possible approximation to the "absolutely black body" of Kirchhoff; since for such a body there are no disturbing complications to effect the law of distribution of energy in the spectrum. Our knowledge of this subject has hitherto amounted to little more than nothing, and I have therefore investigated the surfaces of various bodies, in the same manner that Jacques[1] did sixteen years ago, but with materially better means for exploring the spectrum and for determining temperatures. The apparatus which I have used for this purpose, consisting of the calibrated platinum and platino-rhodium thermo-element of Le Chatelier, and the spectrobolometer of Langley, in which I have introduced a number of refinements, is perhaps the best that can be applied to such an investigation at the present time. A complete account of my measurements must be reserved for another occasion, as the computation of the hundreds of curves consumes an extraordinary amount of time. I have not considered it necessary to publish a preliminary account since Rubens' paper was printed, inasmuch as his table contains nothing that has not been given by Michelson and others, although the paper containing the results that I now communicate has been lying in my desk almost from the beginning of the year, awaiting a further revision. But on account of the attention which seems to have been attracted by Rubens' computation, I feel constrained to publish a brief outline of some results which I now regard as established, since they are in direct contradiction to Michelson's formula and lead to quite different conclusions from those which Ebert has regarded as justifiable.

With regard to the arrangement of the apparatus in these investigations I will here merely refer to my various papers on bolo-

[1] W. JACQUES, *Distribution of heat in the spectra of various sources of radiation.* Baltimore, 1879.

metric measurements in *Wiedemann's Annalen*. All the essential parts of the apparatus—the thermo-element with its method of calibration, the spectrobolometer and the galvanometer—are described there at length. These earlier investigations, particularly those relating to the absorption of gases and the dispersion of fluorite, may be regarded as a necessary and important preparation for the work now under consideration.

The substances which were investigated,—polished platinum, the carbon filament of an incandescent lamp (the carbon was prepared in benzine and was therefore brightly reflecting, while the lamp was furnished with a window of fluorite), black copper oxide, oxide of iron, and lampblacked platinum,—gave very different spectra at the same temperature. In the case of each body, however, the wave-length of maximum energy moved toward the upper end of the spectrum with increasing temperature, as Langley had already found it to do in the case of lampblacked or oxydized copper. For different substances this displacement took place in a different manner, a fact which also seems to have been previously indicated by the work of W. H. Julius.[1] According to my measures blackened platinum gives a higher position of the maximum of energy for the same temperature than any other substance. It has been investigated at temperatures up to 450° C. Next comes oxide of iron, which gives somewhat smaller ordinates in the infra-red, these ordinates, moreover, being proportionally smaller as the wave-length increases. Measures have been made up to about 1100° C. Then comes oxide of copper, investigated as far as 900° C., then the carbon filament, and finally the bright platinum, with which measures have been made up to a temperature of 1500° C.. and which gives by far the smallest ordinates in the infra-red of all these substances. At 5μ its radiation is only about one-tenth as intense as that of oxide of iron at the same temperature.

These differences are probably determined by differences in the selective reflection of the substances. It follows that oxide

[1] W. H. JULIUS, *Licht- und Wärme-Strahlung verbrannter Gase.* Preisschrift, Berlin.

of copper, oxide of iron, and particularly lampblacked platinum are the closest approaches to an "absolutely black body."

For oxide of copper I have transformed a series of energy curves into normal energy curves, in the manner described at length by Langley. Further corrections have also been applied —for the different angles of incidence on the prisms in different spectral regions and the correspondingly different losses by reflection thereby produced, and for the selective reflection of the two silvered concave mirrors which are used in my apparatus to form an image of the spectrum. These last two corrections have very little or no effect on the main result. On the other hand, a very important correction which I had previously studied in some detail, consists in filling out the gaps in the energy curve due to the absorption bands of carbon dioxide and water vapor in the observing room. Below 6μ this process of piecing out the energy curve is no longer possible with the necessary precision, on account of the broad absorption bands of water vapor in that region. Hence I could not determine the maxima for greater wave-lengths than 5μ, although the energy curves of the prism were measured below this point, for temperatures down to 70°C. In Langley's curves most of these absorption bands, and among them those most prejudicial to accuracy, do not occur. Finally, at 7μ the absorption of my fluorite prism begins to be perceptible, so that for this reason also the computation of even the approximate course of the energy curve is very uncertain, if not impossible.

The curves which were obtained after these corrections had been applied exhibited a conformity to law in a number of different ways. The most important laws are the following:

1. *For the normal energy curve the following relation holds in the neighborhood of the maximum:*

$$\lambda_1 \times \lambda_2 = \lambda_{max}^2 .$$

In this equation λ_1 and λ_2 are two wave-lengths of equal intensity, one above and one below the wave-length (λ_{max}) of the maximum. This relation, which holds, within the limits of error of observation, only in the vicinity of the maximum, is especially

useful for determining the exact position of the maximum by means of λ_1 and λ_2. It also renders unnecessary the filling out of the depressions due to absorption which have been mentioned, even in the most unfavorable cases where the maximum falls exactly at the place of an absorption band, such as the band of carbon dioxide at $4^{\mu}.27$ or the band of water vapor at $2^{\mu}.66$.

As a proof of the relation I give a few determinations of the position of the maximum ordinate. They are based upon the relation and at the same time demonstrate its correctness:

Temp. = 295° C.
Temp. of screen = 16°.2 C.

λ_1	λ_2	$\sqrt{\lambda_1 \lambda_2}$	
4.280	4.800	4.532	λ_{max} 4.503
4.000	5.080	4.508	
3.895	5.185	4.494	
3.543	5.640	4.471	
3.175	6.410	4.512	
2.590	8.060	4.569	
2.295	8.950	4.532	

Temp. = 441° C.
Temp. of screen = 15°.2 C.

λ_1	λ_2	$\sqrt{\lambda_1 \lambda_2}$	
3.508	3.785	3.644	λ_{max} 3.652
3.382	3.938	3.650	
3.290	4.058	3.654	
3.220	4.163	3.662	
3.162	4.258	3.669	
3.035	4.505	3.697	
2.972	4.658	3.722	
2.913	4.800	3.739	
2.868	4.935	3.763	

Temp. = 888° C.
Temp. of screen = 15°.6 C.

λ_1	λ_2	$\sqrt{\lambda_1 \lambda_2}$	
2.193	2.375	2.282	λ_{max} 2.287
2.160	2.420	2.287	
2.090	2.505	2.288	
2.037	2.570	2.288	
1.992	2.630	2.290	
1.812	2.977	2.323	

Temp. = 937° C.
Temp. of screen = 15°.2 C.

λ_1	λ_2	$\sqrt{\lambda_1 \lambda_2}$	
2.155	2.255	2.205	λ_{max} 2.195
2.110	2.280	2.194	
2.085	2.301	2.191	
2.045	2.353	2.194	
1.948	2.458	2.189	

2. *The wave-length of the maximum is to a very close approximation inversely proportional to the absolute temperature.*

This relation may be proved by means of the following short table, in which the first column contains the temperature T of the curve in centigrade degrees, the second the corresponding absolute temperature, the third the wave-length of the maximum, and the last the product of this wave-length and the absolute temperature.

T	Abs. T	λ_{max}	$\lambda_{max} \times$ Abs. T.
228	501	5.03	2520
262	535	4.83	2584
295	568	4.503	2558
299	572	4.46	2551
310	583	4.396	2564
388	661	3.908	2567
437	710	3.578	2542
441	714	3.652	2607
528	801	3.250	2603
698	971	2.670	2593
703	976	2.658	2594
824	1097	2.389	2621
841	1114	2.375	2648
888	1161	2.287	2655
937	1210	2.195	2656
973	1246	2.166	2699
1009	1282	2.125	2727

This table represents about half of my best measures with oxide of iron. There are several possible reasons for the fact that $\lambda_{max} \times$ abs. temp. is too small for low temperatures, and I will mention them below.

First; with respect to the radiation of the greater wave-lengths, oxide of iron does not behave precisely like an absolutely black body. The ordinates for the larger waves become greater for the same temperature if its surface is coated with lampblack, and the amount of increase, moreover, grows with increasing wave-length. Hence the maximum of the energy curve for oxide of iron is higher than it would be for an absolutely black body; it is displaced toward the upper end of the spectrum. As an example, I obtained the following values when the surface of oxide of iron was coated with lampblack:

T	λ_{max}	$\lambda_{max} \times$ Abs. T.
372	4.025	2616
348	4.214	2617

The product for unsmoked oxide of iron at 360° C. is, according to the table, about 2560.

The probability of this explanation is enhanced by the fact that the maximum for bodies having a strong selective reflection in the infra-red, is always considerably higher in the spectrum than for oxide of iron or lampblack at the same temperature. The order of the substances which have been mentioned, for any

temperature which is the same for all, is: platinum, bright carbon (graphite), oxide of copper, oxide of iron, lampblacked platinum or oxide; so that the maximum for bright platinum always has the smallest wave-length.

Second; according to my recent investigations on the dispersion of my spectrum, the smaller wave-lengths are to be taken a little smaller than the values determined from earlier measurements. Although the amount of the correction is exceedingly small (about $\frac{1}{14}$ of the width of the bolometer strip at 2μ), its effect is nevertheless perceptibly to diminish the wave-lengths λ_{max} of the curves for high temperatures; the product $\lambda_{max} \times$ abs. temp. is likewise diminished, and hence the relation holds more nearly than before. I have not applied this correction, as the measures for determining the dispersion are not yet completed. In comparison with that first mentioned due to selective reflection, its effect is almost negligible.

Third; the effect of the selective absorption of the lampblacked bolometer strip is to be noticed. According to all that we know of the absorption of lampblack, from the researches of Ångström, its effect would be similar to that of the cause first mentioned, *i. e.*, it would tend to made the product $\lambda_{max} \times$ abs. temp. too small for the greater wave-lengths and low temperatures.

Finally, the zero point of my curves is not the absolute zero, but about 290° on the absolute scale; it is the temperature of a screen placed before the slit, the spectrum of which lies in the greater wave-lengths. The longer waves in my curves would therefore receive proportionally greater ordinates if the curves were referred to the absolute zero of temperature.

These are the principal causes of the fact that the product $\lambda_{max} \times$ abs. temp. as furnished by observation is too small for long waves and low temperatures. If we regard them as furnishing a satisfactory explanation, we may say, with some degree of probability, that *the wave-length of the maximum of energy in the spectrum of an absolutely black body is inversely proportional to the absolute temperature;* or, *the vibration-frequency of the waves*

chiefly radiated by the molecules of the body is proportional to the absolute temperature. The law must hold for any body incapable of reflection,—gaseous, fluid or solid,—in so far as the molecular vibrations are concerned from which Kirchhoff's law is deduced. For example, an infinitely thick layer of a gas which absorbs all waves to some extent may be regarded as an absolutely black body.

If we choose to assume that the absolute scale of temperature is still unknown, we may define it by means of the relation given above. Its zero point would be defined as the temperature at which the vibration-frequency of the molecules of an absolutely black body is equal to zero. The zero point which is deduced from these considerations is nearly the same as that deduced from the laws of gases and the mechanical theory of heat.

I will not enter into further conclusions which may be drawn from this law with respect to its bearing on physical questions. It deserves to be mentioned, however, that the theory of Kövesligethy leads to the two laws which here have no other than an empirical basis.

If the quantitative result of my investigations is provisionally assumed to be

$$\lambda_{max} \times \text{abs. temp.} = 2700,$$

Langley's value $0^{\mu}.5$ for the position of maximum energy in the normal solar spectrum gives

$$\text{solar temperature} = \frac{2700}{0.5} \text{ degrees on the absolute scale} = 5130°\text{C.};$$

that is, the Sun gives an energy spectrum which is the same as that of an absolutely black body at 5130°C.; and this would be its temperature if its light were entirely a consequence of its heated condition and if its surface possessed no selective reflection. The latter condition would be fulfilled if the Sun is a gaseous body.

In my opinion the least accurate, because most difficult, part of the investigation leading to this result, is the determination of the wave-length of the maximum in the solar energy curve

when freed from the effects of absorption and reduced to the normal scale. It is to be hoped that a more exact determination of this value may be made.

A characteristic fact in the history of the measurement of very high temperatures is, that all the high values tend to be reduced by improved methods. It is especially noticeable in the case of the temperature of the Sun, for while Rosetti's value was 10,000°, and even higher values were computed by earlier observers, those which have been obtained in recent times are materially smaller. Messrs. W. E. Wilson and P. L. Gray,[1] following Rosetti's method, have quite lately obtained a solar temperature of 6200°C. Not only the course of the historical development of the question, but the experimental basis of these and my own researches seems to point to the conclusion that the lower values are the more nearly correct.

HANNOVER, TECHN. HOCHSCHULE,
June, 1895.

[1] *Phil. Trans.*, 1894, p. 361.

ON THE EFFECT OF PRESSURE OF THE SURROUNDING GAS ON THE TEMPERATURE OF THE CRATER OF AN ELECTRIC ARC LIGHT.[1]

By W. E. WILSON.

OF late years it has often been assumed that the temperature of the crater forming the positive pole of the electric arc is that of the boiling of carbon. The most modern determinations give this point as about 3300°–3500° C.

Solar physicists have thought that the photosphere of the Sun consists of a layer of clouds formed of particles of solid carbon. As the temperature of these clouds is certainly not below 8000° C., it seems very difficult to explain how carbon can be boiling in the arc at 3500° and yet remain in the solid form in the Sun at 8000°. Pressure in the solar atmosphere seemed to be the most likely cause of this, and yet, from other physical reasons, this seemed not probable.

In order to investigate whether increased pressure in the gas surrounding an electric arc would raise the temperature of the crater, I had an apparatus made by the Cambridge Instrument Company. It consists of a strong cast-iron box, which was tested by hydraulic pressure to 2000 pounds per square inch. The negative carbon was kept in position against a copper ring by a spiral spring behind it. The positive carbon was hand-fed by a friction roller, which was moved by a handle outside the box. A steel tube was screwed into the box at such an angle that, by looking down it, we could see well into the crater of the positive pole. The end of this tube is closed by a glass lens, which formed an image of the crater at a distance of 80^{cm}.

A Boys' radio-micrometer, with its aperture reduced to about 2^{mm} diameter, was so placed on the pier in the laboratory that the image of the crater fell on its small aperture. The instrument thus gave deflections proportional to the radiation coming

[1] Read before the Royal Society.

from the crater. The current was supplied from a battery of accumulators, giving an E. M. F. of 110 volts. Suitable resistances of platinoid wire were put in the circuit, so that the current could be varied from 40 to 10 ampères. An ammeter was also in circuit, and the poles of the arc were connected to a voltmeter.

The gas used was nitrogen, and the pressure was got by connecting the box by a copper pipe with the valve of a 20-foot steel cylinder filled with the gas at a pressure of 120 atmospheres. A T-joint on the copper pipe was connected with a Bourdon pressure-gauge, which showed the pressure in the box at any moment.

The method of experimenting was first to start the arc with the pressure in the box at that of the atmosphere. The image of the brightest part of the crater was thrown on the aperture of the radio-micrometer, and a series of observations taken of the deflections of the instrument. The pressure was then gradually increased and the maximum deflections observed. As the pressure rises the resistance of the arc increases, and, in order to keep the same current flowing, the resistance in the circuit was reduced. It soon became evident that, even with moderate pressures of about 5 atmospheres, the temperature of the crater had fallen. This was not only shown by the reduction in the deflections of the radio-micrometer, but also by the fall in brilliancy of the image of the crater to the eye. The pressure was then increased to about 20 atmospheres, and the brilliancy of the crater fell to a dull red color. These experiments were repeated several times and always with the same results.

I then tried the effect of reducing the pressure in the box by means of an air-pump, but as some of the glands in the box were only intended for an internal pressure, I found it impossible to get a good vacuum; yet by keeping the pump at work, and thus getting a moderate vacuum, I found the radiation of the crater to be much greater than at the atmospheric pressure.

The temperature of the crater seemed very sensitive to any sudden diminution of pressure in the gas. If the blow-off valve was suddenly opened, the brilliancy of the crater fell so much that it became nearly invisible. When the box was being

exhausted by the air-pump, although the temperature of the crater was rising as the vacuum improved, yet at each stroke of the pump the eye could see a distinct falling off of brilliancy in the image.

It was thought that the diminution of brilliancy might be due to smoke inside the box, but on looking through the window everything was seen sharply defined, also the gas as it issued from the blow-off was perfectly clear. The arc was also kept burning for some time in the box at the atmospheric pressure, but the image remained quite clear, and the inside of the box seemed quite free of smoke.

From these experiments it would seem as if the temperature of the crater, like that of a filament in an incandescent lamp, depends on how much it is cooled by the surrounding atmosphere, and not on its being the temperature at which the vapor of carbon has the same pressure as the surrounding atmosphere. That carbon volatilizes in some form at comparatively low temperatures seems likely, from the way in which the carbon of incandescent lamp filaments is transferred to the glass. The pressure of the vapor of carbon in the arc may consequently be very small, and further it would seem that the supposition of high pressures in the solar photosphere, which has been referred to in the beginning of this paper, is not borne out by these experiments, and that carbon may exist there in the solid form at very high temperatures although the pressures are comparatively low.

The experiments on high pressures were conducted on several occasions. On the last occasion, in addition to repeated former experiments, the experiments on reduced pressures were performed, and I then had the great advantage of the presence, advice, and assistance of my friends Professor Minchin and Professor G. F. Fitzgerald. The later series of experiments entirely confirmed my former ones.

A CONTRIBUTION TO THE THEORY OF RADIATION.[1]

By G. JAUMANN.

IN the following article it is shown (1) that the vibrations which are the source of radiation of a luminous body are demonstrably and measurably *damped*, and (2) that they are not excited by fortuitous impulses, but by the continuous influence of a cause which is periodic in its action.

1. DAMPING OF RADIATION AND CONTINUOUS SPECTRA.

A continuous spectrum is at present regarded as the limiting case of a line spectrum in which the number of lines is infinitely great. According to Newton, an infinite number of different rays are present in white light, and, in fact, white light can be produced by again combining these rays.

Now it seems improbable that the most satisfactory conception of the process of emission is obtained by supposing that a white-hot body gives out an infinite number of vibrations. Such a complicated representation has perhaps been arrived at because the nature of the process is such that the emitted light cannot well be represented as a sum of periodic vibrations. In order to understand what takes place in *dispersion*, on the other hand, Newton's conception is the best.

The different colors of a spectrum are regarded as *incoherent*. This is a condition of things which it would be difficult to prove directly. The reverse condition, however, in case it is found to be compatible with the facts, can be proved indirectly. If the rays of a continuous spectrum are coherent, they can be compounded. The result of this integration is that the radiated light-wave can be represented as a simple, even if *not a periodic*, function. If, now, the emission of the non-periodic wave so resulting is comprehensible from other points of view, we might

[1] *Zur Kenntniss des Ablaufes der Lichtemission;* von G. Jaumann. Translated from *Annalen der Physik und Chemie*, 53, 832.

hope to reach some conclusion as to the nature of radiation, and at the same time be able to admit the hypothesis *that the different rays of a continuous spectrum are coherent.*

The intensity of the rays of a continuous spectrum is a function of the period of vibration.[1] If we let da represent the amplitude of such a vibration, *i. e.*, the square root of the intensity of rays whose periods fall between u and $(u + du)$, we have the relation

$$da = f(u)\,du.$$

The displacement at time t is represented by

$$da \sin ut = f(u)\,du \sin ut.$$

If all the vibrations are coherent and have similar phases, they can be compounded into a resultant vibration, which is given by the integral

$$\phi(t) = \int_0^\infty f(u) \sin ut\,du, \tag{1}$$

which is to be extended throughout the entire spectrum. $\phi(t)$ represents the true emission.

In this direction, however, no further progress can be made. There are no experimental determinations of $f(u)$, as only a very few volumetric measurements have been made, and these not in continuous spectra which can be regarded as simple.

It is necessary to take the opposite course, and to start from an assumption as to the nature of emission, *i. e.*, of the function $\phi(t)$. Now, the most natural supposition is that the emission takes place under conditions of strong damping.

The radiating vibrations will then, like all damped vibrations, follow the law

$$\left.\begin{aligned} \phi(t) &= Ae^{-\kappa t} \sin pt, \\ p^2 &= u_1^2 - \kappa^2, \end{aligned}\right\} \tag{2}$$

in which κ is the constant of damping, and u the period of the undamped vibration.

This vibration $\phi(t)$ continues from $t = 0$ to $t = \infty$, before it is extinguished. Such a vibration cannot be represented by

[1] Period of vibration here signifies the quotient $\frac{2\pi}{\tau}$, in which τ is the time during which the vibration continues.

Fourier's theorem as a discrete, even if infinite, series of sine vibrations, but only as a *continuum* of such vibrations. The distribution of amplitudes in such a continuous spectrum is found by means of the Fourier integral

$$\phi(t) = \frac{2}{\pi}\int_0^\infty \sin tu\, du \int_0^\infty \phi(t) \sin ut\, dt.$$

It is here assumed that the elementary vibrations have the same phase as the resultant vibration, an assumption which is rendered necessary by the requirement that the intensity must vanish in the infra-red and ultra-violet portions of the spectrum for which $u = 0$ and $u = \infty$ respectively.

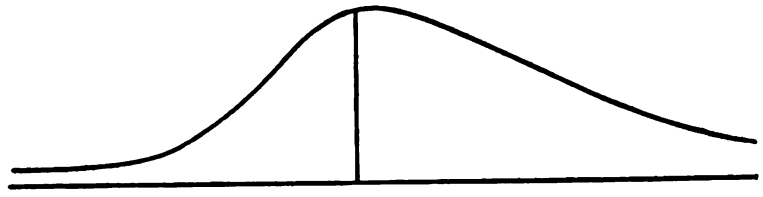

FIG. 1

By comparison of the Fourier integral with equation (1) it follows that the required distribution of amplitudes is represented by

$$f(u) = \frac{2}{\pi}\int_0^\infty \phi(t) \sin ut\, dt.$$

Finally, introducing the assumption as to the nature of the function $\phi(t)$ which is stated in equation (2), and performing the integration, we obtain

$$f(u) = \frac{4}{\pi} A \kappa p \frac{u}{\sqrt{(\kappa^2 + p^2 + u^2)^2 - 4p^2u^2}}. \qquad (3)$$

The period V, for which $f(u)$ is a maximum, is determined by

$$V^4 - \tfrac{2}{3}(p^2 - \kappa^2)V^2 - \tfrac{1}{3}(p^2 + \kappa^2)^2 = 0.$$

There is, consequently, only one maximum of $f(u)$ between the limits of integration $u = 0$ and $u = \infty$. This maximum always lies between $u_1 = \sqrt{p^2 + \kappa^2}$ and p, and approaches u_1 when the damping is diminished (at the beginning of luminosity). These relations are represented graphically in Fig. 1.

When the damping is not quite aperiodic, the displacement $(u_1 - V)$ of the maximum from the undamped period u_1 is always an imperceptibly small quantity of the second order.

The transition from an undamped sine vibration to this analysis of a damped vibration corresponds so closely to the transition from a sharp to a broadened spectral line that the following assumption is justifiable:

The broadening of spectral lines is explained as the result of damping of the vibrations to which the emission of light is due.

A broadened line is essentially a continuous spectrum. The spectrum of most white-hot bodies may be regarded as made up of a number of overlapping broadened lines.[1]

The radiation of light by a solid or liquid incandescent body or a dense gas takes place, therefore, under the influence of a damping action on the molecular vibrations. The value of the constant of damping κ can be given with the same degree of certainty as that which attaches to our knowledge of the distribution of intensity in a broadened line.

Suppose, for example, that the constant of damping is

[1] Among previous explanations of the broadening of spectral lines may be mentioned the following:

Zöllner (*Pogg. Ann.*, 1871) assumes that gases always yield continuous spectra, the intensity of which is, however, so small as to be imperceptible, except where the characteristic bright lines occur. The continuous spectrum becomes noticeable under increased pressure. This view is not incorrect, but the fundamental idea is unfruitful.

Lippich (*Pogg. Ann.*, 1870), from the standpoint of the kinetic theory of gases, connects broadening of the lines with deviation from Mariotte's law.

Kayser (*Winkelmann's Handbuch der Physik*, 1894) explains the broadening, from the standpoint of the molecular theory, as the secondary effect of collisions among the molecules, which occur more frequently when the density of the gas is increased.

Lockyer concludes from the broadening of the spectral lines that dissociation of the elements must take place.

Ebert (*Wied. Ann.*, 1889) explains the broadening on Doppler's principle, as the result of the motion of vibrating molecules in the line of sight.

The view has also been expressed that the broadening of doublets is analogous to the production of combination tones in acoustics, and is due to the great amplitude of the vibrations which cause the emission of light.

So far as I know, Fourier's theorem has only been applied to spectroscopic problems by Stoney, but without results of any value, as he merely arrived at the conjec ture that harmonic vibrations must be found in the spectrum, which is not the case.

required for the magnesium line λ 2852. Under certain circumstances this line widens so greatly that, even as far as the wavelength 2950, the intensity becomes a quarter as great as the maximum, *i. e.*, the amplitude $f(u)$ is half that of the maximum amplitude $f(V)$. With these values we find from equation (3)

$$\alpha = 10^{13} \times 19 \text{ sec}^{-1}.$$

Hence the amplitude of the vibration falls off in only five oscillations in the ratio of e: 1.

A still more extreme case of damping is shown by the hydrogen lines under high pressure. In general, however, the observed

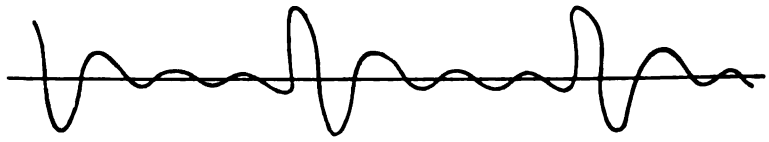

FIG. 2

broadening of spectral lines is very small. The amplitude falls off in the ratio of e: 1 only after from fifty to 100 oscillations.

II. PERIOD OF EXCITATION. BANDS OR SERIES OF LINES.

If the radiating vibrations are damped, and the flow of light is continuous, some cause must be present which from time to time excites these vibrations anew. Such excitations might occur fortuitously at irregular intervals, or periodically.

We will make the latter assumption and see what consequences it leads to.

If the excitement is periodic, the process of emission, although subject to damping, acquires an additional period; namely, that of the exciting impulse. Fig. 2 represents such a vibration.

Now, according to Fourier's theorem, the vibration is, as a periodic function, resolved by the prism into a sum of discrete sine vibrations, whose periods are whole multiples of the period of the function,—which is, in this case, the period of the exciting impulse.

The periodically excited radiation has, therefore, a line spectrum. The vibration-frequencies of these lines represent whole multiples of the excitation-frequency.

The excitation-frequency per second is in any case much smaller than the frequency of the radiating vibration, since many of the damped vibrations pass away before another exciting impulse follows. The multiples of the excitation-frequencies are, therefore, also very close together, and hence the spectrum is crossed by a great number of fine equidistant lines, the intervals depending upon the vibration-frequencies.

The difference between the vibration-frequencies of two of these lines is equal to the excitation-frequencies per second.

Nothing is said in the above statement with regard to the strength of these lines. It follows from the convergence of the Fourier theorem that they must become weaker and weaker as they approach the extreme ultra-violet. In the infra-red, however, they are not necessarily stronger than in the visible spectrum; they may be weaker there, or they may entirely disappear. Further, they need not all appear, even in the region of greatest strength, for certain lines may fail in accordance with some law which we may well suppose to exist, the amplitudes of the missing vibrations becoming zero in accordance with the special nature of the periodic function.

It may easily be seen how this distribution of amplitudes is determined in any given case. The longer the interval between the exciting impulses, the more finely will the spectrum be ruled, and if the interval is so long that the emitted vibrations have time to nearly die away, the spectrum will be very nearly continuous, and the distribution of intensity will follow the law stated in the preceding section of this paper.

With greater frequency of excitement the spectrum will be discontinuous, but, as a whole, it will exhibit the same distribution of intensity. We have in this case *a spectral band, or line series.*

The vibration-frequencies n of all the lines which constitute a band are, according to Deslandres,[1] determined by the law

$$n = a \pm b\kappa^2,$$

[1] *C. R.*, 1889, 1890.

in which a and b are constants, and κ represents the whole numbers. The difference between any two vibration-frequencies is a whole multiple of the constant b, which is, therefore, the vibration-frequency of the exciting impulse. *The entire band, which is often made up of hundreds of lines, is emitted by a single, damped, periodically excited sine vibration.*

For example, Deslandres represents the sixty-three lines in the band $\lambda 3914.6 - 3827.4$, which is found in the spark spectrum of nitrogen at normal pressure, by the formula

$$\tfrac{1}{2}\, 10^{-3} n = 255.45 + 0.001534\,(\kappa - 1)^2.$$

In this case there are about $1\frac{1}{2}$ (more exactly, 1.534) exciting impulses during 255450 radiated vibrations.

A band at $\lambda 3891.5 - 4033.8$ in the spectrum of an illuminating gas flame, in which twenty lines appear, Deslandres represents by

$$\tfrac{1}{2}\, 10^{-3} n = 257.04 - 0.02078\,(\kappa - 1)^2.$$

Here, in nearly the same number of emitted vibrations (namely, 257040), there are no less than 20.78 exciting impulses.

From the distribution of intensity in such a band, the damping of the vibration which produces the emission can also be estimated, as was shown in the preceding section. The line No. 11, $\lambda = 3936.4$, of the above band is the strongest. The intensity falls off on both sides. At line No. 5, $\lambda = 3902.4$, it is only about one-fourth that of the maximum. The constant of damping, computed from these data, is

$$\kappa = 10^{13} \times 3.9\ \text{sec}^{-1}.$$

Hence the illuminating gas gives out a vibration whose wave-length is 0.000394^{mm}, which is so damped that its amplitude falls off in the ratio $e:1$ after twenty-one vibrations, and which after 12360 vibrations is again excited.

III. DEVIATIONS FROM SYMMETRICAL DISTRIBUTION OF INTENSITY, AND FROM DESLANDRES' LAW.

The distribution of intensity in bands, less frequently in widened lines, is under some circumstances one-sided. This

appearance I connect provisionally with the phenomena of doublets and triplets, which are directly observable. They result from simultaneous vibrations with a given relation of amplitude. If both widen, a one-sided distribution of intensity is produced, as shown in Fig. 3, in which the distribution of intensity of the components is represented by dotted lines, that of the result by the unbroken curve.

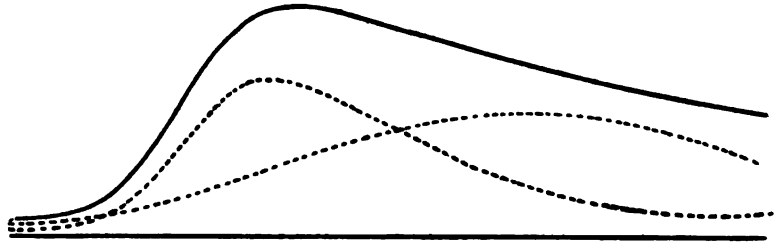

FIG. 3

Balmer[1] represents the lines of a series more accurately by

$$n = a + b\kappa^{-2},$$

while a still better agreement with observation is obtained by Kayser and Runge,[2] by means of the formula

$$n = a + b\kappa^{-2} + c\kappa^{-4}.$$

To a first approximation this formula agrees with Deslandres', but the numbering must begin at the other end of the series.

Thus Deslandres' formula is not rigorously exact. It follows that, while the exciting impulse can be regarded as periodic to within a first approximation, it is not completely so. But since there must be a very great regularity in the periods of excitement, in order to produce the spacing of lines according to the law of Kayser and Runge, I am induced to believe that the excitation is not produced by periodical impulses, but by the continuous influence of another vibration, which is itself damped, and which is, therefore, very nearly, but not quite, periodic.

As an illustration, let a tuning-fork be taken, and let it be set in vibration by a violin-bow, which is not, however, drawn uni-

[1] *Wied. Ann.*, 1885.

[2] *Abh. der Berl. Akad.*, 1890, 1891, 1892.

formly across the fork, but with a damped and sinuous motion.

If the exciting vibration is damped, it itself requires an exciting cause, and this stimulus of the second order may either be of a fortuitous nature, or it may again be periodic. In the latter case a series of bands, instead of a series of lines, would result, such as we find, for example, in the group of bands at $\lambda 5000 - 2800$ in the spectrum of nitrogen.

As to the distribution in latitude of the solar phenomena I have calculated according to quarters, and have obtained the above results by zones in the two hemispheres.

During the first quarter the prominences show almost the same frequency north and south of the equator, although in the second they are more numerous in the northern zones, and probably we are already in the presence of a greater northern activity.

The frequency of faculæ has continued greater in the southern zones, and the maximum frequency is always in the zone $-10°$ $-20°$. The prominences have been always in considerable number in the large zone $0° \pm 50°$, and very rare between $\pm 50° \pm 90°$.

The spots, like the faculæ, present their maximum in the zone $-10°$ $-20°$, but they do not extend beyond the parallels $\pm 30°$.

As to the general distribution of groups there is already an indication of the transferring of the locality of greater activity from the southern to the northern latitudes.

Metallic eruptions have not been observed, nor phenomena in the chromosphere worthy of note in the vicinity of spots.

ROME, September 3, 1895.

THE SPECTRUM OF HELIUM.[1]

By W. CROOKES.

IN the *Chemical News* for March 29 last (71, 151), I published the results of measurements of the wave-lengths of the more prominent lines seen in the spectrum of the gas from clèveite, now identified with helium. The gas had been given to me by the discoverer, Professor Ramsay; and being from the first batch prepared, it contained other gases as impurities, such as nitrogen and aqueous vapor, both of which gave spectra interfering with the purity of the true helium spectrum. I have since, thanks to the kindness of Professors Ramsay and J. Norman Lockyer, had an opportunity of examining samples of helium from different minerals and of considerable purity as far as known contamination is concerned. These samples of gas were sealed in tubes of various kinds and exhausted to the most luminous point for spectrum observations. In most cases no internal electrodes were used, but the rarefied gas was illuminated solely by induction, metallic terminals being attached to the outside of the tube.[2] For photographic purposes a quartz window was attached to the end of the tube, so that the spectrum of the gas could be taken "end on."

My examinations have chiefly been made on five samples of gas.

(1) A sample from Professor Ramsay in March last. Prepared from clèveite.

(2) A sample from Professor Ramsay in May last. Prepared from a specimen of uraninite sent to him by Professor Hillebrand. Gas obtained by means of sulphuric acid; purified by sparking.

(3) A sample from Professor Ramsay in June last. Prepared from bröggerite.

[1] From the *Chemical News*, August 23.

[2] *Journal of the Institution of Electrical Engineers*, part 91, 20, Inaugural Address by the President, William Crookes, F.R.S., January 15, 1891.

(4) A sample from Professor Lockyer in July last. Prepared by a process of fractional distillation from a sample of bröggerite sent by Professor Brögger.

(5) A sample of gas from Professor Ramsay, "Helium Purissimum." This was obtained from mixed sources, and had been purified to the highest possible point.

In the following table the first four samples of gas will be called: (1) "Clèveite, R.;" (2) "Uraninite, R.;" (3) "Bröggerite, R.;" and (4) "Bröggerite, L." Only the strongest of the lines, and those about which I have no doubt, are given. The wave-lengths are on Rowland's scale.

The photographs were taken on plates bent to the proper curvature for bringing the whole spectrum in accurate focus at the same time. The spectrum given by a spark between an alloy of equal atoms of mercury, cadmium, zinc and tin was photographed at the same time on the plate, partially overlapping the helium spectrum; suitable lines of these metals were used as standards. The measurements were taken by means of a special micrometer reading approximately to the $\frac{1}{100000}$ inch, and with accuracy to the $\frac{1}{10000}$ of an inch. The calculations were performed according to Sir George Stokes' formula, supplemented by an additional formula kindly supplied by Sir George Stokes, giving a correction to be applied to the approximate wave-lengths given by the first formula, and greatly increasing the accuracy of the results.

Wave-length.	Intensity.	
7065.5	5	A red line, seen in all the samples of gas. Young gives a chromospheric line at 7065.5.
6678.1	8	A red line, seen in all the samples of gas. Thalén gives a line at 6677, and Lockyer at 6678. Young gives a chromospheric line at 6678.3.
5876.0	30	The characteristic yellow line of helium, seen in all the samples of gas. Thalén makes it 5875.9, and Rowland 5875.98. Young gives a chromospheric line at 5876.
5062.15	3	
5047.1	5	A yellow-green line, only seen in "Helium Puriss." and in "Bröggerite, R," and "L." Thalén gives the wave-length as 5048.

Wave-length.	Intensity.	
5015.9	7	A green line seen in all the sample of gas. Thalén gives the wave-length 5016. Young gives a chromospheric line at 5015.9.
4931.9	3	
4922.6	10	A green line, seen in all the samples of gas. Thalén gives the wave-length 4922. Young gives a chromospheric line at 4922.3.
4870.6	7	A green line, only seen in "Uraninite, R." Young gives a chromospheric line at 4870.4.
4847.3	7	A green line, only seen in "Uraninite, R." Young gives a chromospheric line at 4848.7.
4805.6	9	A green line, only seen in "Uraninite, R." Young gives a chromospheric line at 4805.25.
4764.4	2	There is a hydrogen line at 4764.0.
4735.1	10	A very strong greenish blue line, only seen in "Uraninite, R."
4713.4	9	A blue line, seen in all the samples of gas. Thalén's measurement is 4713.5. Young gives a chromospheric line at 4713.4.
4658.5	8	A blue line, only seen in "Uraninite, R."
4579.1	3	A faint blue line, seen in "Uraninite, R." Lockyer gives a line at 4580, from certain minerals. I can see no traces of it in the gas from Bröggerite. A hydrogen line occurs at 4580.1.
4559.4	2	Young gives a chromospheric line at 4558.9.
4544.1	5	
4520.9	3	A faint blue line, seen in "Uraninite, R." Lockyer gives a line at 4522, seen in the gas from some minerals. Young gives a chromospheric line at 4522.9. It is absent in the gas from Bröggerite.
4511.4	5	A blue line, seen in "Uraninite, K," but not in the others. It is coincident with the strong head of a carbon band in CO_2 and Cy spectrum.
4497.8	2	There is a hydrogen line at 4498.75.
4471.5	10	A very strong blue line, having a fainter line on each side, forming a close triplet. It is a prominent line in all the samples of gas examined. Young gives the wave-length 4471.8 for a line in the chromosphere, and Lockyer gives 4471 for a line in gas from Bröggerite.
4435.7	9	Seen in "Helium Puriss."
4437.1	1	Young gives a chromospheric line at 4437.2.

Wave-length.	Intensity.	
4428.1	10	These two lines form a close pair. I can only see them in "Uraninite, R." No trace of them can be seen in the gases from other sources. Young gives chromospheric lines at 4426.6 and 4425.6.
4424.0	10	
4399.0	10	A strong line, only seen in "Uraninite, R." Absent in the gas from the other sources. Lockyer gives a line at 4398 in gas from certain minerals. Young gives a chromospheric line at 4398.9.
4386.3	6	Seen in all the samples of gas. Young gives a chromospheric line at 4385.4.
4378.8	8	These two lines form a pair seen in "Uraninite, R," but entirely absent in the others.
4371.0	8	
4348.4	10	Seen in "Uraninite, R." Lockyer finds a line at 4347 in the gas from certain minerals.
4333.9	10	Probably a very close double line. Seen in "Uraninite, R," Clèveite. R." Not seen in the other samples. Lockyer gives a line in the gas from certain minerals at 4338.
4298.7	6	Only seen in "Uraninite, R." Young gives a chromospheric line at 4298.5.
4281.3	5	Only seen in "Uraninite, R."
4271.0	5	Only seen in "Uraninite, R." The strong head of a nitrogen band occurs close to this line.
4258.8	7	Seen in all the samples of gas.
4227.1	5	Only seen in "Uraninite, R." Young gives a chromospheric line at 4226.89.
4198.6	9	These three lines form a prominent group in "Uraninite, R," they are very faint in "Clèveite, R," and in "Bröggerite, L," but are not seen in "Bröggerite, R."
4189.9	9	
4181.5	9	
4178.1	1	An extremely faint line. Lockyer gives a line at 4177, seen in the gas from certain minerals, and Young gives a chromospheric line at 4179.5
4169.4	6	Seen in "Helium Puriss."
4157.6	8	A strong line in "Uraninite, R," very faint in "Bröggerite, R," and "L," not seen in "Clèveite, R."
4143.9	7	Strong in "Clèveite, R," in "Helium Puriss.," and in "Bröggerite, L." It is faint in "Uraninite, R." and not seen in "Bröggerite, R." Lockyer gives a line at 4145 in gas from certain minerals.
4121.3	7	Present in all the gases except "Clèveite, R."
4044.3	9	Present in "Uraninite, R," and "Clèveite, R." Absent in the others.

Wave-length.	Intensity.	
4026.1	10	These lines form a very close pair, seen in all the samples of gas, except "Brŏggerite, R." Lockyer finds a line in Brŏggerite gas at 4026.5.
4024.15	6	
4012.9	7	Seen in all the samples of gas.
4009.2	7	Seen in "Helium Puriss."
3964.8	10	The center line of a dense triplet. Only seen in "Clèveite, R," in "Helium Puriss.," and "Brŏggerite, L." Hale gives a chromospheric line at 3964.
3962.3	4	Seen in all the samples of gas.
3948.2	10	Very strong in "Uraninite, R," very faint in "Clèveite, R," and not seen in the others. Lockyer finds a line in gas from Brŏggerite at 3947. There is an eclipse line at the same wave-length.
3925.8	2	Seen in "Helium Puriss."
3917.0	2	Seen in "Helium Puriss."
3913.2	4	Only seen in "Uraninite, R," and "Helium Puriss." Hale gives a chromospheric line at 3913.5.
3890.5	9	A very strong triplet, seen in all the samples of gas. Lockyer finds a line having a wave-length 3889 in gas from Brŏggerite. Hale gives a chromospheric line at 3888.73. There is a strong hydrogen line at 3889.15.
3888.5	10	
3885.9	9	
3874.6	6	Only seen in "Uraninite, R."
3867.7	8	Seen in "Helium Puriss."
3819.4	10	Seen in all the samples of gas. Deslandres gives a chromospheric line at 3819.8.
3800.6	4	Seen in "Helium Puriss."
3732.5	5	Seen in "Helium Puriss." Hale gives a chromospheric line at 3733.3.
3705.4	6	Seen in all the samples of gas. Deslandres gives a chromospheric line at 3705.9.
3642.0	8	Only seen in "Uraninite R."
3633.3	8	Seen in "Helium Puriss."
3627.8	5	Only seen in "Uraninite, R."
3613.7	9	Seen in "Helium Puriss."
3587.0	5	Seen in "Helium Puriss."
3447.8	8	Seen in "Helium Puriss."
3353.8	5	Seen in "Helium Puriss."
3247.5	2	Seen in "Helium Puriss."
3187.3	10	The center line of a close triplet. Very faint in "Clèveite, R," and "Uraninite, R." and strong in "Helium Puriss.," and in "Brŏggerite, L." It is not seen in "Brŏggerite, R."

Wave-length.	Intensity.	
2944.9	8	A prominent line, only seen in "Helium Puriss." and in "Bröggerite, L."
2536.5	8	Seen in "Helium Puriss." A mercury line occurs at 2536.72.
2479.1	4	Seen in "Helium Puriss."
2446.4	2	Seen in "Helium Puriss."
2419.8	2	Seen in "Helium Puriss."

Some of the more refrangible lines may possibly be due to the presence of a carbon compound with the helium. To photograph them, a long exposure, extending over several hours, is necessary. The quartz window has to be cemented to the glass with an organic cement, and the long-continued action of the powerful induction current on the organic matter decomposes it, and fills the more refrangible end of the spectrum with lines and bands in which some of the flutings of hydrocarbon, cyanogen, and carbonic anhydride are to be distinguished.

There is a great difference in the relative intensities of the same lines in the gas from different minerals. Besides the case mentioned by Professor Kayser of the yellow and green lines, 5876 and 5016, which vary in strength to such a degree as to render it highly probable that they represent two different elements, I have found many similar cases of lines which are relatively faint or absent in gas from one source and strong in that from another source.

Noticing only the strongest lines, which I have called "Intensity 10," "9," or "8," and taking no account of them when present in traces in other minerals, the following appear to be special to the gas from uraninite:

4735.1
4658.5
4428.1
4424.0
4399.0
4378.8
4371.0
4348.4
4198.6
4189.9

4181.5
4157.6
3948.2
3642.0

The following strong lines are present in all the samples of gas:

7065.5
6678.1
5876.0
5015.9
4922.6
4713.4
4471.5
4386.3
4258.8
4012.9
3962.3
3890.5
3888.5
3885.9
3819.4
3705.4

The distribution assigned to some of the lines in the above tables is subject to correction. The intensities are deduced from an examination of photographs, taken with very varied exposures; some having been exposed long enough to bring out the fainter lines, and some a short time to give details of structure in the stronger lines. Unless all the photographs have been exposed for the same time, there is a liability of the relative intensities of lines in one picture not being the same as those in another picture. Judgment is needed in deciding whether a line is to have an intensity of 7 or 8 assigned to it; and as in the tables I have not included lines below intensity 8, it might happen that another series of photographs with independent measurements of intensities would in some degree alter the above arrangement.

In the following table I have given a list of lines which are probably identical with lines observed in the chromosphere and prominences:

Wave-lengths observed of helium	Intensities	Wave-lengths of chromospheric lines,[1] Rowland's scale	Wave-lengths observed of helium	Intensities	Wave-lengths of chromospheric lines,[1] Rowland's scale
7065.5	10	7065.5	4424.0	10	4425.6
6678.1	10	6678.3	4399.0	10	4398.9
5876.0	30	5876.0	4386.3	6	4385.4
5015.6	6	5015.9	4298.7	6	4298.5
4922.6	10	4922.3	4227.1	5	4226.89
4870.6	7	4870.4	4178.1	1	4179.5
4847.3	7	4848.7	3964.8	10	3964.0 H[2]
4805.6	9	4805.25	3948.2	10	3945.2 H
4713.4	9	4713.4	3913.2	4	3913.5 H
4559.4	2	4558.9	3888.5	10	3888.73 H
4520.9	3	4522.9	3819.4	10	3819.8 D
4471.5	10	4471.8	3732.5	5	3733.3
4437.1	1	4437.2	3705.4	6	3705.9 D
4428.1	10	4426.6			

[1] "A Treatise on Astronomical Spectroscopy," by Dr. J. Scheiner, translated by E. B. Frost, Boston, 1894.

[2] The wave-lengths to which the initials D and H are added are wave-lengths of lines photographically detected in the spectrum of the chromosphere by Deslandres (D) and Hale (H). Their photographs do not extend beyond wave-length 3630. Professor Lockyer (*Roy. Soc. Proc.*, 58, 116, May 1895) has already pointed out fourteen coincidences between the wave-lengths of lines in terrestrial helium and in those observed in the chromosphere, the eclipse lines, and stellar spectra.

Minor Contributions and Notes.

NOTE ON A DIFFERENTIAL METHOD OF DETERMINING THE VELOCITY OF STARS IN THE LINE OF SIGHT.

The publication of M. Orbinsky's article[1] on a differential method of determining the velocity in the sight-line of stars whose spectra have been secured by an objective-prism, together with Professor Vogel's favorable comment on the method, justly arouses interest. None of the plans hitherto proposed for thus utilizing objective-prism plates have proved successful, and any new suggestions deserve attention.

An especial defect in the method of which M. Orbinsky writes lies in the fact that it requires the spectra of two different stars to be brought side by side upon the plate by successive exposures. This introduces serious danger of unequal flexure at the two different pointings of the telescope; and, still more, it fails to make available for the purpose in hand the great number of plates already secured by the Harvard College Observatory.

In a letter sent to Professor E. C. Pickering on May 29, 1893, I suggested a plan identical with that of M. Orbinsky, except that it utilizes all the spectra which, from the position of the stars, would naturally fall within the field of a plate. I quote from that letter: "I assume that the velocity of one star on the given plate has already been determined by the spectrographic method, and the velocities of the other stars on the plate are to be referred to it. For convenience, suppose that the velocity of the standard star (α) has been found to be zero. Let the perpendicular distance between the F line (or, better still, any line common to both spectra and as far toward the red as possible) in the star α and the F (or less refrangible) line of the star β, whose velocity is desired, be accurately measured on a dividing engine; similarly let the perpendicular distance between the K (or better, more refrangible) lines in the two spectra be measured. The difference between these distances $F\alpha - F\beta$ and $K\alpha - K\beta$ will measure the relative velocity of the two stars in the line of sight."

[1] *A. N.* 138, 9–12.

As an example of the method I selected the stars δ and ε Orionis, which are near enough together to fall on the same plate, and whose velocities have been accurately determined at Potsdam. As the constants of the prisms were unknown to me, I was obliged to assume them to be the same as for Chance's flint glass. The fact was taken into account that the rays from one of the stars would be inclined by an angle θ to the principal plane of the prism, so that instead of the index of refraction n, the quantity $\sqrt{n^2 + (n^2 - 1)\tan^2\theta}$ must be used in obtaining the deviation. As a result I found that the displacement on one of the plates taken with four prisms should amount to about $0^{mm}.01$.

It is evident that the displacements of spectra near the edges of the plates might be masked by distortions, involving numerous corrections in the course of the computation, but the Harvard plates overlap to such an extent that the spectra very near the edges of a plate would seldom need to be used. The accuracy of this form of the differential method is not greater than in the form suggested by M. Orbinsky; the effects of distortion by the lens and prisms may be as serious as those of flexure in pointing at different stars, but the great advantage is gained that all the spectra sufficiently bright and not too far from the center of the plate, whose spectral types are comparable, can be measured on a single plate. As I stated in my letter to Professor Pickering, "Of course this method would not pretend to compete with the spectrographic method, but it seems to me that it might serve to give an idea of the direction and order of velocity of a great number of stars, and thus to sift out large velocities and interesting cases. It certainly would be one of the highest merits of any method that it makes available the great number of valuable plates which you have already obtained."

EDWIN B. FROST.

HANOVER, N. H.,
August 13, 1895.

NOTE ON THE DUPLICITY OF THE D_3 LINE.[1]

IN September 1884, while absent from the Observatory of Palermo, Sig. A. Mascari, my assistant, wrote me that he had observed the line D_3 double; on March 9, 1886, in observing a very bright prominence with rather a narrow slit I also saw the line D_3 double.

[1] From the *Astronomische Nachrichten*, No. 3305.

But as this line was then generally regarded as single, and by those who had observed it with instruments far more powerful than ours, while this line had not yet been observed double in any terrestrial body; and moreover since a duplication as well of the other principal bright lines of the chromosphere and likewise of all the dark lines of the photosphere, which were not too fine, was seen with the slit somewhat widened, I considered that the duplication of D_3 was not a phenomenon to be regarded as objective and characteristic of helium.

I referred to this phenomenon in *Comptes Rendus* No. 15 (April 12, 1886), and in the *Memorie degli Spettroscopisti Italiani*, Vol. XV, 1886. In the same year I showed the duplication of all the coarser solar lines, bright and dark, to several persons, including Professor H. Ebert, then in Palermo.

A. Riccò.

R. Osservatorio di Catania,
July 29, 1895.

NOTE ON EARLIER OBSERVATIONS OF ATMOSPHERIC ABSORPTION BANDS IN THE INFRA-RED SPECTRUM.

In his second article on the emission of gases (*Wied. Ann.*, 51, p. 5, 1894), Dr. Paschen expresses himself as being at a loss to know why Langley and others failed to find the atmospheric cold bands at about $\lambda 2^{\mu}.6$ and $4^{\mu}.2$ in the infra-red spectra of heated solids, while noting other absorption bands which, according to Paschen, are much less effective.

The apparent inconsistency is readily explained if it is noted, first, that in the great water-vapor band whose center is at $\lambda 6^{\mu}.6$ for hot emission, and at $\lambda 7^{\mu}.1$ for cold absorption, the *percentage* of absorption for rays of that wave-length is larger than the corresponding percentage for the combined water and carbon dioxide band at $\lambda 2^{\mu}.6$; while, in the second place, the early measures (at Allegheny) were largely made in spectra of solids near the boiling point of water, where the wave-length of the energy in the prismatic maximum nearly coincides with that of the great water-vapor absorption band at $\lambda 7^{\mu}.1$. Owing to the latter circumstance this band has an especially marked prominence, which is not so striking to the eye, when viewed in a high temperature curve, because the energy is there relatively feeble at the position of the greater band. Meanwhile the increasing energy of the shorter waves with rising temperature lends undue prominence to the

appearance of the smaller absorption bands in these regions of shorter wave-length.

While the great width of the water vapor band at $\lambda 7^{\mu}.1$ makes it less pronounced to the eye than one of the sharper notches of the spectral energy-curve, this same width, and the position of the region of absorption in the neighborhood of the maximum emission from bodies at ordinary terrestrial temperatures, make the "great band" at $\lambda 7^{\mu}.1$ by far the most important of the water-vapor bands. (See, for example, the curve of atmospheric transmission, *Am. Jour. of Sci.*, 38, Dec. 1889, plate 10, where the successive cold bands, largely due to water-vapor, find their culmination in this great band at a rock-salt deviation of $38\frac{1}{2}°$. It may be noted that the bands less refrangible than the great band, and there exhibited on the prismatic scale would be much narrower and more symmetrical with the more refrangible series if they were represented on the normal scale.)

Dr. Paschen's allusion to the atmospheric absorption bands at $\lambda 2^{\mu}.6$ and $4^{\mu}.2$ as "much stronger" than the band at $\lambda 7^{\mu}.1$, is only true for high temperature curves, and, even then, only for the apparent importance as judged by the prominence of the inflection in the spectral energy curve, or by the diminution of the total energy for the sum of all wave-lengths; but since the proportion of the total energy struck out in a given absorption band varies with the temperature of the radiating body, it is fairer to describe the intensity of the band as a percentage of its own nearly homogeneous radiations. Judged by this standard, there can be no doubt that the atmospheric absorption band at $\lambda 7^{\mu}.1$ is the *great* water-vapor band as it is much the greatest gap in the spectrum for terrestrial radiations, and in fact Dr. Paschen's footnote (p. 23, *loc. cit.*) admits as much.

I have explained why the cold-bands of shorter wave-length are not conspicuous in the spectral energy-curve of a body at low temperature, where the absorbable energy of shorter wave-length is small. Actually, traces of these bands at shorter wave-lengths were found as early as 1885 by Dr. Langley and myself while observing some of these low temperature spectra, but owing to the necessity at that time for the use of a wide bolometer, and a galvanometer highly astaticized for the detection of heat in the spectrum of a blackened copper radiator at 100° C., seen under a small angle at a distance of 100 meters, and owing further to the shifting of the apparent position of a cold band on the rapidly descending branch of a spectral energy curve, towards the side of lesser

heat, exact positions could not be obtained; and even the existence of such absorption in so short an air-column was not then as certain as could be wished.

Examples of some of these results have been published in the memoir on "The Temperature of the Moon" (*National Acad. of Sci.*, 4, Part 2, p. 186, Washington, 1889).

We may conclude that while the absorption band at λ 2$^{\mu}$.6 is the principal water-vapor band at high temperatures, the great band ($\lambda = 7^{\mu}.1$) is chief at low temperatures, and probably the transfer of the title "principal band" might go on indefinitely, if dissociation did not fix a limit of temperature above which it is impossible for water to exist.

F. W. VERY.

FRIEDRICH WILHELM GUSTAVE SPÖRER.[1]

ON the 7th of last July Professor Dr. Friedrich Wilhelm Gustave Spörer, until recently First Observer at the Astrophysical Observatory at Potsdam, died suddenly from heart failure.

Dr. Spörer was born in Berlin on October 23, 1822, and after attending the Friedrich-Wilhelm Gymnasium, devoted himself during the years from 1840 to 1843 especially to mathematical and astronomical studies at the University of Berlin. On December 14, 1843, he took his degree with a thesis on the Comet of 1723, dedicated to his instructors Encke and Dove. During the succeeding years he busied himself with astronomical computation, under Encke's direction, at the Observatory at Berlin, and after passing the *Staats-Examen* he went in 1846 to the gymnasium in Bromberg, as instructor in mathematics and science; from there he went in 1847 to Prenzlau, and in 1849 to Anclam, where he was engaged for twenty-five years as instructor, and finally as prorector of the gymnasium there.

His preference for astronomy had led him to devote his leisure hours since 1860 to observations of Sun-spots. His restless assiduity and great perseverance are clearly shown by his success in carrying on investigations of much scientific value in the field of Sun-spot statistics, which soon made his name known in the scientific world, although he possessed only an inferior instrumental equipment, consisting of a small telescope provided with a ring micrometer.

Professor Shellbach, instructor of the then Crown Prince, afterward

[1] From the *Astronomische Nachrichten*, No. 3303.

the Emperor Friedrich, called the attention of his royal pupil to Spörer, and the Crown Prince in 1868 aided Spörer's endeavors by providing him with a refractor of five inches aperture, equipped with clockwork, with which he could now carry on his observations according to the well-known method of projection on a larger scale.

The results of his investigations carried on at Anclam have appeared in numerous articles in the *Astronomische Nachrichten*, and in two large memoirs which appeared in 1874 and 1876 as publications of the Astronomische Gesellschaft. The especial merit of these works lies in the careful determination of the law of the Sun's rotation, and also in the close corroboration of the law already formulated empirically by Carrington, which sets forth the diminution in rapidity of Sun-spot rotation from the equator towards the poles.

In 1868 Spörer, with Professor Tietjen and Dr. Engelmann took part in the astronomical expedition which was sent to the East Indies by Germany to observe the total eclipse of the Sun.

In 1874 Spörer received a call as observer to the Astrophysical Observatory at Potsdam, plans for which were then under way. He removed in this same year to Potsdam and carried on his Sun-spot observations with his instrument installed on the tower of the Soldiers' Orphan Asylum in Potsdam.

His industry continued in the larger circle of activity which opened to him at the Observatory in Potsdam and his work was now largely devoted to the field of Sun-spot statistics, to which he devoted himself with unwearying attention and the same zeal as in Anclam.

The four comprehensive memoirs compiled by him, which appeared in the publications of the Astrophysical Observatory, contain a rich amount of observation-material which has a lasting value in the study of the proper motion of Sun-spots.

In 1882 Spörer was appointed First Observer. This position he occupied until October 1, 1894, when in consideration of his advancing years he was released from service, and entered into well-earned retirement, which unfortunately he was not long permitted to enjoy.

Spörer's life was rich in good fortune and external prosperity, and thanks to his unusual good health he remained to the day of his death free from the infirmities of age. While on a journey to visit his children, without the slightest previous suggestion of sickness, he passed quietly and painlessly away. H. C. V.

Reviews.

Bemerkung zu der Abhandlung über Lichtemission (*Wied. Ann.* **53**, 832), G. JAUMANN. *Wied. Ann.* **54**, 178.

IN this note the author states that the conclusions published in his previous paper (translated in the present number of THE ASTROPHYSICAL JOURNAL) have been in part anticipated by Lommel (*Wied. Ann.* **3**, 251, 1878), whose explanation of the broadening of spectral lines as a result of damped vibrations seems to have been generally overlooked. Lommel did not, however, extend his theory to the explanation of banded spectra. It is pointed out that Lommel's investigation of the distribution of intensity in the widened line is erroneous, since he resolves the damped vibration into a *continuum* of sine vibrations with all oscillation-frequencies between $+\infty$ and $-\infty$, in which therefore each color is contained *twice*. The maximum does not fall at the place which corresponds to the period of the damped vibration, as it would according to this process, but at a place somewhat nearer that of the undamped vibration. Ebert has, in fact, found that with increased density of the luminous vapor all widened spectral lines are displaced slightly toward the red. The method which he employed (that of interference with large difference of path) is particularly suited to the determination of such small displacements and hence of the constant of damping.

The paper by Lommel which is referred to by Professor Jaumann contains a development of the principle of damped vibrations and its application to the phenomena of fluorescence. Lommel remarks that the assumption of damping represents a condition more common in nature than free oscillation, as almost all motion takes place under resistance.

The usual method of treatment in which the resistance is not considered is a special case of the preceding. The paragraph in which Lommel sums up his conclusions with regard to the widening of spectral lines (omitting a few words referring to the formulæ of development) may be rendered as follows:

The light emitted by an atom which vibrates against resistance is, therefore, not homogeneous but is spread out by a prism into a continuous spectrum, extending on both sides of the place corresponding to the principal vibration-frequency to a distance which increases with the coefficient of resistance. J. E. K.

RECENT PUBLICATIONS.

A LIST of the titles of recent publications on astrophysical and allied subjects will be printed in each number of THE ASTROPHYSICAL JOURNAL. In order that these bibliographies may be as complete as possible, authors are requested to send copies of their papers to both Editors.

For convenience of reference, the titles are classified in thirteen sections.

1. THE SUN.

BROWN, E. Growth and Decay of Sun-spots. Jour. B. A. A. **5**, 460–461, 1895.

COIT, J. R. A Solar Prominence. A. J. No. 350, 112, 1895.

CORDER, HENRY. Growth and Decay of Sun-spots. Jour. B. A. A. **5**, 458–459, 1895.

DOOLITTLE, ERIC. Some Interesting Results of Helmholtz's Theory of Solar Contraction. Pop. Ast. **3**, 21–24, 1895.

HALE, GEORGE E. Preliminary Note on the D_3 line in the Spectrum of the Chromosphere. A. N. **138**, 227–230, 1895.

HUGGINS, W. On the Duplicity of the Solar Line D_3. A. N. **138**, 229–230, 1895.

LOCKYER, J NORMAN. The Sun's Place in Nature. VIII. Nat. **52**, 253–255, IX. 327–329, X. 422–425, 1895.

MASCARI, A. Sulla frequenza delle macchie solari osservate nel Regio Osservatorio di Catanianel-l'anno 1895. Mem. Spettr. Ital., **24**, 97–102, 1895.

OSTEN, HANS. Der grosse Sonnenfleck. Sir. **23**, 185–186, 1895.

QUIMBY, A. W. Sun-spot Observations. A. J. No. 350, **15**, 107, 1895.

RICCÒ, A. Il Sole. Università di Catania, 1895, 24. pp.

RICCÒ, A. Sulla duplicità della riga solare D_3. A. N. **138**, 287–288, 1895.

SAMPSON, R. A. On the Rotation and Mechanical State of the Sun. Mem. R. A. S. **51**, 123–183, 1895.

SCHAEBERLE, J. M. Report on the Total Eclipse of the Sun observed at Mina Bronces, Chile, on April 16, 1893. Contributions from the Lick Observatory, No. 4.

TACCHINI, P. Protuberanze solari osservate al Regio Osservatorio del Collegio Romano nel 2° trimestre del 1895. Mem. Spettr. Ital. **24**, 107–108, 1895.

TACCHINI, P. Sulla distribuzione in latitudine dei fenomeni solari osservati al Regio Osservatorio del Collegio Romano nel 2° trimestre del 1895. Mem. Spettr. Ital. **24**, 110–116, 1895.

TACCHINI, P. Macchie e facole solari osservate al Regio Osservatorio del Collegio Romano durante il 2° trimestre del 1895. Mem. Spettr. Ital. **24**, 103–106, 1895.

TODD, D. P. The Sun. Science, **2** (Ser. 2), 29–39, 1895.

TOWNSEND, J. S. List of Groups 1894–1895, showing whether larger near the East or West Limb of the Sun. Jour. B. A. A. **5**, 468, 1895.

WILSON, W. E. The thermal radiation from Sun-spots. M. N. **55**, 457–462, 1895.

WOLFER, A. Ueber das Thätigkeitsgebiet der grossen Sonnenfleckengruppe vom Februar 1892. Wolf's Astron. Mitteilungen No. 85. V. J. S. Naturfor. Gesell. Zürich, **40**, 139–186, 1895.

WONASZEK, A. A. Zählungen von Sonnenflecken. A. N. **138**, 257–260, 1895.

3. STARS AND STELLAR PHOTOMETRY.

CAMPBELL, W. W. Observations of Nova (5533 R) Normae. A. J. No. 349, **15**, 100, 1895.

CAMPBELL, W. W. Observations of Nova (7787 Q) Cygni. A. J. No. 349, **15**, 100, 1895.

EASTON, C. On the Distance of the Stars in the Milky Way. Knowl. **18**, 179–182, 1895.

FLANERY, D. Fluctuations of Mira Ceti. Knowl. **18**, 182–183, 1895.

MARKWICK, E. E. Note on the variable star T Centauri, Cord. G. C. 18609. A. N. **138**, 213–214, 1895.

MINCHIN, GEORGE M. The Electrical Measurement of Starlight. Nat. **52**, 246–248, 1895.

MINCHIN, G. M. The Electrical Measurement of Starlight. Proc. R. S. **58**, 142–155, 1895.

PARKHURST, HENRY M. On the Light-Curve of 103 T Andromedæ. A. J. No. 352, **15**, 135–136, 1895.

PARKHURST, HENRY M. Notes on Variable Stars, No. 9. A. J. No. 350, **15**, 105–106, 1895.

PARKHURST, J. A. Maxima and Minima of Long-Period Variables. A. J. No. 349, **15**, 99–100, 1895.

PAUL, H. M. Observations of X Hydrae. A. J. No. 349, **15**, 103, 1895.

PAUL, H. M. Confirmations of Variability. A. J. No. 352, 15, 132–133, 1895.

ROBERTS, ALEX. WM. New Variable near S Velorum. A. J. No. 352, 15, 134–135, 1895.

ROBERTS, ALEX. WM. New Short-Period Variable. A. J. No. 350, 15, 111, 1895.

ROBERTS, ALEX. WM. Observations of Southern Variable Stars. A. J. No. 349, 15, 100–101, 1895.

ROBERTS, ISAAC. The Cluster Messier 46, and the Nebula Herschel IV. 39 Argus. Knowl. 18, 182, 1895.

SKINNER, AARON N. New Variable in Libra, S. DM.–18° 3975. A. J. No. 352, 15, 135, 1895.

SPERRA, W. E. Maxima and Minima of Variable Stars. A. J. No. 350, 15, 109–110, 1895.

YENDELL, PAUL S. Ephemeris of Variables of the Algol-Type. A. J. No. 349, 15, 104, 1895.

4. STELLAR SPECTRA, DISPLACEMENTS OF LINES AND MOTIONS IN THE LINE OF SIGHT.

FRANKS, W. S. The Spectra and Colours of Stars. Jour. B. A. A. 5, 455–458, 1895.

KLEIN, H. J. Untersuchungen ueber die Spektra der hellern Sterne nach den photographischen Aufnahmen auf dem astrophysikalischen Observatorium zu Potsdam (Review). Sir. 24, 202–208, 1895.

KRUEGER. F. Spectroskopische Beobachtungen farbiger Sterne. A. N. 138, 239, 1895.

5. PLANETS, SATELLITES AND THEIR SPECTRA.

BARNARD, E. E. On a photographic study of the earth-lit portion of the new Moon. M. N. 55, 456–457, 1895.

CLERKE, A. M. Satellite Evolution. Knowl. 18, 205–207, 1895.

ELGER, T. G. Selenographical Notes. Obs'y 18, 305–307; 334–335, 1895.

FAUTH, P. Neue Beiträge zur Begründung einer Modernen Selenographie und Selenologie, II., mit einem Atlas, enthaltend 25 topographische Spezialkarten des Mondes. Johann Ambrosius Barth, Leipzig, 66 pp. 1895.

FLAMMARION, C. Les anneaux de Saturne. Bul. Soc. Ast. de France. 1, 233–239, 1895.

JANSSEN, J. Sur la présence de la vapeur d'eau dans l'atmosphère de la planète Mars. C. R. 121, 233–237, 1895.

KEELER, J. E. Photographs of the spectrum of the ball and rings of Saturn. M. N. 55, 474–475, 1895.

KLEIN, H. J. Die Mondbeobachtungen auf der Sternwarte des Harvard-College in Cambridge, N. A. (Review). Sir. 23, 172–182; 194–195, 1895.

KLEIN, H. J. Topographische Spezialkarten des Mondes (Review). Sir. 23, 121–125, 1895,

KRIEGER, J. N. Die Mondlandschaft Herschel f. bei untergehender Sonne. Sir. 23, 195–196, 1895.

LEYST, ERNST. Ueber den Magnetismus der Planeten. Repertorium für Meteorologie, 17, 1–97, 1894.

LOEWY et PUISEUX. Sur la constitution physique de la Lune et l'interprétation de divers traits de sa surface, mis en evidence par les photographies. C. R. 121, 80–85, 1895.

LOEWY et PUISEUX. Sur les photographies de la Lune et sur les objets nouveaux qu'elles ont permis de découvrir. C. R. 121, 6–12, 1895.

LOWELL PERCIVAL. Evidence of a Twilight Arc upon the Planet Mars. Nat. 52, 401–405, 1895.

MARTH, A. Ephemeris for physical observations of Jupiter, 1895–96. M. N. 55, 486–493, 1895.

NOBLE, W. The Periodicity of Jupiter's Markings. Obs'y, 18, 337–338, 1895.

NYLAND, A. A. Jupiter-Beobachtungen. A. N. 138, 317–318, 1895.

PRINCE, C. L. The Visibility of the Dark Side of Venus. Obs'y, 18, 338, 1895.

ROYAL OBSERVATORY, GREENWICH. Observations of the diameters of Jupiter and his Satellites. M. N. 55, 477–480, 1895.

SAMTER, H. Die Milchstrasse. Him. u. Erde. 7, 508–528; 544–571, 1895.

SARLING. Eine äeltere Beobachtung ueber Lichterscheinungen im Mare Crisium. Sir. 23, 133–135, 1895.

SARLING. Die Abulfeda-Rille. Sir. 23, 182–184, 1895.

SCHIAPARELLI, G. Venus. A. N. 138, 249–252, 1895.

STRUVE, H. Bestimmung der Abplattung und des Aequators von Mars. A. N. 138, 217–228, 1895.

TAYLOR, H. DENNIS. A negative optical proof of the absence of seas in Mars. M. N. 55, 462–474, 1895.

WAUGH, W. R. The Periodicity of Jupiter's Markings. Obs'y, 18, 311, 1895.

6. COMETS, METEORS AND THEIR SPECTRA.

BARNARD, E. E. On the Photographic Discovery of Comet V, 1892 Pop. Ast. 3, 13–14, 1895.

DENNING, W. F. The Perseids of 1895. Nat. 52, 395–396, 1895.

DENNING, W. F. Bright Meteor of July 7, 1895. Obs'y 18, 325–328, 1895.

DOBERCK, W. Radiants of Shooting Stars. A. N. 138, 299–302, 1895.

HOWELL, E. E. On two new Meteorites. Am. Jour. 50 (Ser. 3), 252–254, 1895.

NYLAND, A. A. Die Lyriden von 1895. A. N. 138, 315–316, 1895.

7. NEBULÆ AND THEIR SPECTRA.

BARNARD, E. E. On a Great Photographic Nebula near Antares. A. N. 138, 211–214, 1895.

BARNARD, E. E. On a Great Photographic Nebula in Scorpio, near Antares. M. N. 55, 453–456, 1895.

BARNARD, E. E. On the Variable Nebulæ of Hind (N. G. C. 1555) and Struve (N. G. C. 1554) in Taurus, and on the Nebulous Condition of the Variable Star T Tauri. M. N. 55, 442–453, 1895.

DREYER, J. L. E. Index Catalogue of Nebulæ found in the Years 1888 to 1894, with Notes and Corrections to the New General Catalogue. Mem. R. A. S. 51, 185–228, 1895.

LÁSKA, V. Ueber den Nebel im Orion. Sir. 23, 136–137, 1895.

NAEGAMVALA, K. D. Nebula No. 6595 of the New General Catalogue. Obs'y 18, 310–311, 1895.

RICCÒ, A. Fotografie della Grande Nebulosa di Orione e della minore presso la stella 42 Orionis. Rend. R. Acad. Lincei 4 (Ser. 5a), 337–341, 1895.

ROBERTS, ISAAC. Photographs of Elliptical and Spiral Nebulæ. Knowl. 18, 207–208, 1895.

8. TERRESTRIAL PHYSICS.

BAUER, L. A. On the Secular Motion of a Free Magnetic Needle. Phys. Rev. 3, 34–49, 1895.

BAUER, L. A. Distribution and the Secular Variation of Terrestrial Magnetism. Am. Jour. 50 (Ser. 3), 109–116; 189–205, 1895.

BIGELOW, F. H. The Earth a Magnetic Shell. Am. Jour. 50 (Ser. 3), 81–99, 1895.

GARIBALDI, P. M. Durata del periodo fra gli ultimi due maximum di macchie solari e di variazioni declinometriche diurne. Atti. Soc. Ligustica Sci. Nat. e Geog. 6, 3–10, 1895.

GOLDHAMMER, D. Observations, faites à l'Observatoire magnétique de l'Université impériale de Kazan, 1895.

PAULSEN, A. La nature et l'origine de l'aurore boréale. Ciel et Terre. 16, 197–205; 227–232; 259–266, 1895.

DE TILLO, A. Loi de la distribution du magnétisme moyen à la surface du globe. C. R. 121, 97–100, 1895.

9. EXPERIMENTAL AND THEORETICAL PHYSICS.

ASCHKINASS, E. Ueber das Absorptionsspectrum des flüssigen Wassers und über die Durchlässigkeit der Augenmedien für rothe und ultrarothe Strahlen. Wied. Ann. 55, 401–431, 1895.

BOREL, G.-A. Recherches sur la réfraction et la dispersion des radiations ultra-violettes dans quelques substances cristallisées. Arch. Gen. 34, 134–158, 1895.

FRIEDEL, CHARLES. Ueber die Absorption der strahlenden Wärme durch Flüssigkeiten. Wied. Ann. 55. 453–478, 1895.

DE GRAMONT, A. Sur l'analyse spectrales directe des minéraux et de quelques sels fondus. C. R. 121, 121–123, 1895.

HÖFFLER, FRIEDRICH. Untersuchungen ueber die Existenz der objectiven Aberration. Inaugural Dissertation, Zürich University, 49 pp., 1895.

MILLAKAN, R. A. A Study of the Polarization of the Light Emitted by Incandescent Solid and Liquid Surfaces. Phys. Rev. 3, 81–100, 1895.

SEGUY, G. Sur un phénomène de phosphorescence obtenu dans des tubes contenant de l'azote rarifié, après le passage de la décharge électrique. C. R. 121, 198–199, 1895.

STONEY, G. JOHNSTONE. Note on the Motions of and within Molecules; and on the Significance of the Ratio of the Two Specific Heats in Gases. Proc. R. S. 58, 177–182, 1895.

10. THE SPECTRA OF THE ELEMENTS.

EDER, J. M. und A. VALENTA. Die verschiedenen Spectra des Quecksilbers. Wied. Ann. 55, 479–502, 1895.

LIVEING et DEWAR. Sur le spectre d'absorption de l'air liquide. C. R. 121, 162–164, 1895.

RUNGE, C., und F. PASCHEN. Ueber das Spectrum des Helium. Sitzber. d. K., Akad. d. W. Berlin, 30, 639–643, 1895.

SCHUMANN, V. Zur Photographie der Lichtstrahlen kleinster Wellenlängen vom Luftspectrum jenseits 185.2 $\mu\mu$. K. Akad. d. W. Wien, Anzeiger Nr. XI, 1895.

11 PHOTOGRAPHY.

BARNARD, E. E. Astronomical Photography. Photo. Times, 27, 65–88, 1895.

RIGOLLOT, H. Action des rayons infra-rouges sur le sulfure d' argent. C. R. 121, 164–166, 1895.

12. INSTRUMENTS AND APPARATUS.

ÅNGSTRÖM, KNUT. On a Simple Method of Photographically Registering the Infra-red Energy Spectrum. Phys. Rev. 3, 137–141, 1895.

ZENGER, C.-V. L' éclipsoscope, appareil pour voir la chromosphère et les protubérances solaires. C. R. 121, 406–408, 1895.

——— Photometric Standards. Nat. 52, 356–357, 1895.

13. GENERAL ARTICLES, MEMOIRS AND SERIAL PUBLICATIONS.

BOUCHARD, C. Sur la présence de l' argon et de l' hélium dans certaines eaux minérales. C. R. 121, 392–394, 1895.

BRAUN, CARL. Ueber Kosmogonie von Standpunct Christlicher Wissenschaft, nebst einer Theorie der Sonne. Zweite Auflage. Aschendorff, Münster, 406 pp., 1895.

MCGOWAN, GEORGE. Helium, together with a few notes on Argon. Knowl. 18, 210–213, 1895.

LOCKYER, J. N. On the New Gas Obtained from Uraninite. Proc. R. S. 58, 67–70; 113–116, 1895.

MOISSAN, H. Action du Fluor sur l' Argon. Proc. R. S. 58, 120–122, 1895.

RAMSAY, W. On a Gas Showing the Spectrum of Helium, the Reputed Cause of D_3, one of the Lines in the Coronal Spectrum. Proc. R. S. 58, 65–67, 1895.

RAMSAY, W. Helium, a Gaseous Constituent of Certain Minerals. Part I. Proc. R. S. 58, 81–89, 1895.

RAMSAY, W., J. NORMAN COLLIE and MORRIS TRAVERS. Helium, a Constituent of Certain Minerals. I. Nat. 52, 306–308. II. Nat. 52, 331–334, 1895.

RUNGE, C. und F. PASCHEN. Ueber die Bestandtheile des Cleveit-Gases. Sitzber. d. K. Akad. d. W. Berlin, 34, 759–763, 1895.

TROOST, L. et L. OUVRARD, Sur la combinaison du magnesium avec l' argon et avec l' hélium. C. R. 121, 394–396, 1895.

NOTICE.

The scope of THE ASTROPHYSICAL JOURNAL includes all investigations of radiant energy, whether conducted in the observatory or in the laboratory. The subjects to which special attention will be given are photographic and visual observations of the heavenly bodies (other than those pertaining to "astronomy of position"); spectroscopic, photometric, bolometric and radiometric work of all kinds; descriptions of instruments and apparatus used in such investigations; and theoretical papers bearing on any of these subjects.

In the department of *Minor Contributions and Notes* subjects may be discussed which belong to other closely related fields of investigation.

It is intended to publish in each number a bibliography of astrophysics in which will be found the titles of recently published astrophysical and spectroscopic papers. In order that this list may be as complete as possible, and that current work in astrophysics may receive appropriate notice in other departments of the JOURNAL, authors are requested to send copies of all papers on these and closely allied subjects to both Editors.

Articles written in any language will be accepted for publication, but unless a wish to the contrary is expressed by the author, they will be translated into English. If a request is sent *with the manuscript* twenty-five reprint copies of each paper, bound in covers, will be furnished free of charge to the author. Additional copies may be obtained at cost price. No reprints can be sent unless a request for them is received before the JOURNAL goes to press.

The Editors do not hold themselves responsible for opinions expressed by contributors.

THE ASTROPHYSICAL JOURNAL will be published on the first day of every month except July and September. The annual subscription price for the United States, Canada and Mexico is $4.00; for other countries in the Postal Union it is 18 shillings. Correspondence relating to subscriptions and advertisements should be addressed to *The University of Chicago, University Press Division, Chicago, Ill.*

Wm. Wesley & Son, 28 Essex St., Strand, London, are sole foreign agents, and to them all European subscriptions should be addressed.

All papers for publication and correspondence relating to contributions and exchanges should be addressed to *George E. Hale, Kenwood Observatory, Chicago, Ill.*

THE

ASTROPHYSICAL JOURNAL

AN INTERNATIONAL REVIEW OF SPECTROSCOPY
AND ASTRONOMICAL PHYSICS

VOLUME II NOVEMBER 1895 NUMBER 4

ON THE BROADENING OF SPECTRAL LINES.

By A. A. MICHELSON.

To ACCOUNT for the finite width of the spectral lines of a substance emitting approximately homogeneous radiations, the following hypotheses have been proposed:

1. As a consequence of Kirchhoff's law "the ratio of brightness of two immediately contiguous portions of a discontinuous, bright-line spectrum constantly decreases, if the number of luminous strata is multiplied or if the coefficient of absorption of the single stratum is increased, until the value is reached which, for the same wave-length and the same temperature, corresponds to the ratio in the continuous spectrum of a body completely opaque for the given thickness."[1]

2. The direct modification of the period of the vibrating atoms in consequence of presence of neighboring molecules.

3. The exponential diminution in amplitude of the vibrations due to communication of energy to the surrounding medium, or to other causes.

4. The change in wave-length due to the Doppler effect of the component of the velocity of the vibrating atom in the line of sight.

[1] SCHEINER, *Ast. Spect.*

To these the following causes may be added:

5. The limitation of the number of regular vibrations by more or less abrupt changes of phase amplitude or plane of vibration, caused by collisions.

6. The possible variations in the properties of the atoms within such narrow limits as to escape detection by other than spectroscopic observations.

This last hypothesis is added chiefly for the sake of completeness, but it seems highly improbable that this cause could be of great importance, and serious objections at once occur, if we attempt by its means to explain the effects of temperature and pressure.

The most promising method of assigning to these different causes their proper measure of importance is to investigate such effects of temperature and pressure from the theoretical as well as the experimental side, and until this is accomplished only vague and unsatisfactory conclusions may be expected. The great importance of such a study, and the interest in it which is shown by such able contributions as those of Wiedeman, Ebert, Rayleigh, and recently, of Jaumann and Galitzin justify the prediction that a complete and satisfactory theory will be forthcoming in the near future.

Meanwhile it may be of interest to consider some results which have been reached in the present paper as a result of several months' labor. That these are in some cases very imperfect is freely admitted, but it is hoped that further experiment may give more definite information—and at least that this contribution will present the essential points in such a manner as to open the work to discussion and criticism.

The objections to the hypotheses numbered 1 and 3 have been considered by Galitzin, Kayser, and others, and these are, I believe, fatal unless the main contention that they are the essential causes be abandoned. Very probably they produce secondary effects which may be traced when the complete theory is developed.

In regard to 4, I cannot agree with the conclusions of Galitzin.

On the contrary the evidence of a very large number of experiments points unmistakably to effects of motion of the molecule in the line of sight. Lord Rayleigh[1] has shown from the standpoint of the kinetic theory that the motion of the molecule in the line of sight can produce a broadening of the lines, and it seems probable that this is the chief if not the only effective cause in operation when the density of the radiating body is low.

Thus in the case of hydrogen it has been shown that the increase in width of the red line above its width at zero pressure is proportional to the pressure,[2] but that even at zero pressure (pressures below $0^{mm}.5$) it has a definite width which is of the order of magnitude required by Rayleigh's investigation on the assumption of a molecular velocity of from 2000 to 4000 meters per second. It has also been pointed out that this limiting width of the spectral lines on this assumption should be proportional to the square root of the absolute temperature and inversely proportional to the square root of the molecular weight of the radiating substance.

The following table gives a list of substances of molecular weights varying from 1 to 200 v_1 and v_2 denote molecular velocities, the former deduced from the inverse ratios of the square root of the molecular weight; the latter calculated from the visibility curves. The agreement with theory while far from perfect is still—considering the difficulties of the experiments, and especially the uncertainty in the temperatures—too striking to be accidental.

It may therefore be conceded that while the causes 1, 3, 4 and 6 together or separately may and probably do produce an appreciable effect, they are generally insufficient to account for the broadening of the spectral lines.

[1] *Phil. Mag.*, April, 1889.

[2] *Phil. Mag.*, September, 1892.

Substance	At. Wt.	v_1	v_2
Hydrogen	1	2000	1500
Lithium	7	800	1200
Oxygen	16	500	800
Sodium	23	400	400
Magnesium	24	400	650
Iron	56	260	500
Cobalt	59	260	560
Nickel	59	260	500
Copper	63	250	450
Zinc	65	250	450
Palladium	106	190	250
Silver	108	190	250
Cadmium	112	190	220
Gold	196	140	225
Mercury	200	140	140
Thallium	204	140	110
Bismuth	210	140	150

The following is an attempt to deduce the value of the broadening of the spectral lines (or at least to find its order of magnitude) on the hypothesis 5.

In Fourier's formula,

$$\phi(x) = \frac{1}{\pi}\int_0^\infty du\,(C\cos ux + S\sin ux),$$

in which

$$C = \int_{-\infty}^{\infty} \phi(v)\cos uv\,dv \text{ and } S = \int_{-\infty}^{+\infty} \phi(v)\sin uv\,dv,$$

the second member represents a group of perfectly homogeneous trains of waves.

If therefore $\phi(x)$ represents the train of waves incident on a prism, the intensity of its spectrum will be

$$\psi^2(u) = C^2 + S^2.$$

Suppose the incident light to consist of a limited number of exactly equal waves corresponding to the number of vibrations emitted by the molecule between two collisions.

If ρ = free path of the molecule,
v = velocity of translation,
V = velocity of light,
r = length of a single train of waves,

then, between the limits $-\frac{1}{2}r$ and $\frac{1}{2}r$ we have

$$\phi(x) = a \cos mx + b \sin mx$$

$$C = a\int_{-\frac{r}{2}}^{+\frac{r}{2}} \cos mv \cos uv\, dv = a\,\frac{\sin \frac{1}{2}(m-u)r}{m-u} + a\,\frac{\sin \frac{1}{2}(m+u)r}{m+u}$$

$$S = b\int_{-\frac{r}{2}}^{+\frac{r}{2}} \sin mv \sin uv\, dv = b\,\frac{\sin \frac{1}{2}(m-u)r}{m-u} - b\,\frac{\sin \frac{1}{2}(m+u)r}{m+u}$$

These terms are all very small (since m is large) except for values of u which differ but little from m or from $-m$. Leaving negative values of u out of consideration, and replacing $u-m$ by $2\pi n$ we have

$$\psi^2(n) = \frac{(a^2+b^2)}{4}\,\frac{\sin^2 \pi n r}{\pi^2 n^2}$$

This represents the distribution of intensities in the spectrum of such a limited train of waves, and if the free path and the velocities of all the molecules were the same, the "width" of the resulting spectral line might be obtained from this expression.

Fig. 1 represents the intensity curve, and the "width" of the line may be taken equal to

$$\pi n r = \pi, \text{ whence}$$

$$n = \frac{1}{r} = \frac{1}{\rho}\frac{v}{V}, \text{ or in wave-lengths,}$$

$$\delta_n = n\lambda^2 = \frac{\lambda^2}{\rho}\frac{v}{V}.$$

In the case of hydrogen at a pressure of 100 mm. we may take $\lambda = 6560 \times 10^{-10}$ $v = 3000$ $V = 3 \times 10^5$ $\rho = 7500 \times 10^{-10}$, whence $\delta_n = .057$ tenth-meter.

The corresponding quantity obtained by experiment (p. 295, *Phil. Mag.*, September 1892) is $2\,(0.128 - 0.048) = 0.16$ tenth meters which is of the same order of magnitude as the theoretical value.

As experiment has shown that in every case thus far examined the width of the spectral lines diminish with the pressure in an approximately linear proportion towards a constant

limiting value, we may for a first approximation derive a formula for the actual width of the line on the assumption that this is the sum of the separate widths due (1) to the motion in the line of sight (2) to the limitation of the free path. The latter has just been given. The former is $\frac{2}{\pi} \times \frac{l_2}{\Delta}\lambda^2$ if Δ is the distance at which the "visibility curve" [1] falls to half its maximum value.

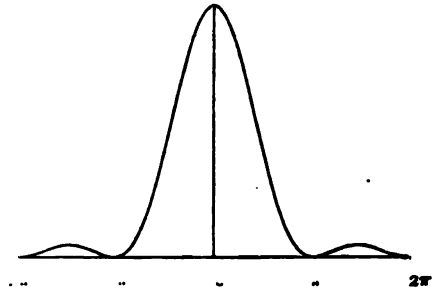

FIG. 1.

Rayleigh's formula as modified by the definition of visibility given in a former paper [2] becomes

$$V = e^{-\pi\left(\frac{\pi X}{\lambda}\frac{v}{V}\right)^2}$$

which gives $\Delta = \frac{1}{\pi}\sqrt{\frac{l_2}{\pi}}\frac{V}{v}\lambda$, whence

$$\delta_1 = 2\sqrt{\pi l_2}\frac{v}{V}\lambda = 3\frac{v}{V}\lambda, \text{ nearly.}$$

We have then $\delta = \delta_1 + \delta_2 = \frac{v}{V}\lambda\left(3 + \frac{\lambda}{\rho}\right)$.

If v = molecular velocity at absolute temperature θ and v_0 the corresponding velocity at θ_0, m the molecular weight; d, the actual density and d_0 the standard density, ρ the corresponding length of free path at d_0, formula (1) becomes

$$\delta = \frac{v_0}{V}\frac{\lambda}{\sqrt{\theta_0}}\sqrt{\frac{\theta}{m}}\left(3 + \frac{\lambda}{\phi}\frac{d}{d_0}\right).$$

[1] *Phil. Mag.*, April, 1891.

[2] *Phil. Mag.*, September, 1892.

In view of the imperfect assumptions it will be better not to attach too much weight to the value of the constants, but it may be worth while to examine the more general formula.

$$\delta = \sqrt{\frac{\theta}{m}}\lambda\,(a + b\lambda d)$$

The experiment verification of this formula is attended with considerable difficulty. Nevertheless the results thus far obtained show that it may be considered as a good first approximation to the truth.

The following are the points which seem to be fairly well established:

1. When the pressure is below one-thousandth of an atmosphere, the second term, $b\lambda d$, may be neglected.

2. Under this condition the width of the line is roughly proportional to the square root of the molecular weight. This is shown in the table.

3. The width increases as the temperature rises, the rate being not very different from that of the square root.

4. When the pressure is increased, the width increases in a nearly linear proportion. (This is shown in Fig. 2, in which the ordinates are widths of line in tenth-meters, and the abcissae are pressures of surrounding gas in mm.)

5. The rate of this increase varies considerably with different substances, but in general it is more rapid, the smaller the molecular weight, and while the actual results can scarcely be said to prove that the rate is inversely as the square root of the molecular weight, they do not differ very greatly from this proportionality.

6. At low pressures the proportionality with λ is not proved — there being about as much evidence for an increaseof δ with λ as for a decrease.

7. At high pressures the width increases with wave-length, but the exact law is not determined.

8. The nature of the surrounding gas or vapor is of secondary importance.

In regard to cause 2 it may be remarked that at pressures below one atmosphere the length of the free path is of the order of one hundred times the radius of the sphere of action of the molecules. It appears probable therefore that at such pressures the number of free vibrations is also at least one hundred times as many as those whose period is modified by collision, and the effect of these modified vibrations would be correspondingly small in broadening the spectral lines except at great densities.

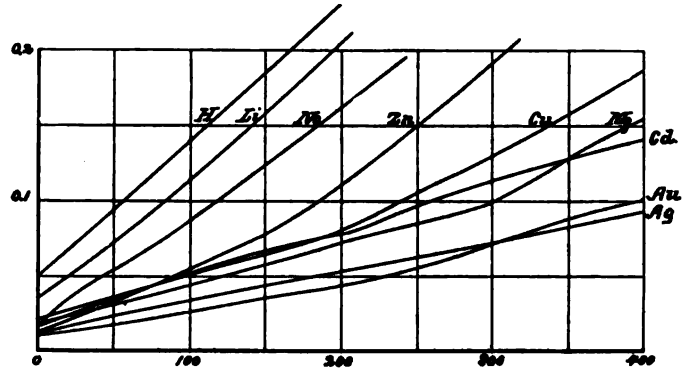

FIG. 2.

It appears probable that the vibratory energy is supplied during "collisions." It does not necessarily follow that the source of this energy is the motion of translation of the molecule (that is, a function of the temperature), but we may suppose, with J. J. Thomson, that there is an interchange of partners among the molecules—which could not occur except on collision—and it seems reasonable to suppose that during this interchange, the chemical (electrical) energy of combination is transformed into electrical vibrations (light).

If we suppose the amplitude of the vibrations to vary as some inverse power of the distance, r, between the approaching molecules we would have

$$\frac{A_0}{A} = \left(\frac{r}{a}\right)^4,$$

A_0 being the amplitude corresponding to the nearest distance a,

But it can be shown that the distance e traveled by the molecule when the amplitude has fallen to one-half its maximum value, in the case of hydrogen at 100 mm. pressure, is of the order of a ten thousandth of a millimeter, so that by the preceding equation $a = (\frac{1}{2})^{\frac{1}{p}} \times e$. a is also of this order of magnitude unless p be small. But this is the order of magnitude of the free path of the molecule, and in all probability the nearest approach is hundreds or thousands of times smaller; so that we are forced to conclude either that p is very small—which is only another way of saying that the amplitude is nearly independent of the distance between the molecules; or else that such a variation of intensity is not an important factor in broadening the spectral lines.

This seems at least conclusive for low or moderate densities. On the other hand, for greater densities, it seems not unlikely that the mutual influence of the molecules may be of great importance.

Where the broadening of the lines is unsymmetrical, and especially where the line is terminated at one side by a sharp edge such broadening can be explained by certain assumptions concerning the law of action of the molecules on their rates and intensities of vibration.

Thus, in the preceding illustration, if

$$\phi(x) = \frac{a}{a^2 + x^2} \cos mx + \frac{x}{a^2 + x^2} \sin mx,$$

the resulting intensity of the spectrum is $I = e^{-4\pi an}$ for positive values of n, and zero for negative values.

If this view is correct, then starting with zero pressure the line should always begin to broaden symmetrically at first, and the assymmetrical broadening should not appear until the pressure is very considerable. As in most cases the width of the spectral lines at low pressure is so small that it is usually masked by imperfections of the spectroscopes employed, this question must be attacked by interference methods.

The method of deducing the form and distribution of light in a spectral line by the visibility curve of its interference fringes

has already given very promising results; but if rigorously interpreted, as shown by Lord Rayleigh,[1] it is limited to the case of symmetrical distributions of light in the source. In fact, for an unsymmetrical source we have

$$V=\sqrt{C^2+S^2} \tag{1}$$

which gives, however, no information concerning C or S.

In order to determine these another equation is necessary, and this is furnished by the change of phase. If ϕ is the phase of the interference band we have

$$\tan\phi=\frac{S}{C} \tag{2}$$

These two equations determine S and C, and from them we have by Fourier's theorem

$$\sqrt{I}=\psi(n)=\frac{1}{\pi}\int_0^\infty d\alpha\cos\alpha n\int_{-\infty}^{+\infty}d\lambda\,\psi(\lambda)\cos\alpha\lambda$$

$$+\frac{1}{\pi}\int_0^\infty d\alpha\sin\alpha n\int_{-\infty}^{+\infty}d\lambda\,\psi(\lambda)\sin\alpha\lambda$$

$$\text{or }\psi(n)=\frac{1}{\pi}\int_0^\infty C\cos\alpha n\,d\alpha+\frac{1}{\pi}\int_0^\infty S\sin\alpha n\,d\alpha.$$

At first it would seem that the determination of the "ϕ" curve would be attended with insurmountable difficulties; for it is practically impossible to divide or even to read a scale so accurately as to find directly the difference of phase, which is, of course, but a fraction of a wave-length.

The following method, judging from some preliminary results obtained in the course of the determination of the length of the meter in light-waves,[2] gives promise of furnishing the required solution.

Suppose an "intermediate standard"[2] consisting of two plane parallel surfaces one centimeter apart to be placed in the "interferometer" and circular fringes obtained for both surfaces.

The phase α and α' of the central dark circle for both surfaces is measured by the "compensator," and the standard is

[1] *Phil. Mag.* November 1892.

[2] Tome XI. *Trav. et Mem. Bur. Int. des Poids et Mésures.*

advanced through its own length and the measurement repeated. If the phase ϕ is constant the difference of phase $a-a'$ will also be constant; if not, then $\phi_n = \Sigma^n_1 (a-a') - n (a-a')_0$ provided the change be not too rapid. If this should be the case, a shorter distance-piece or "intermediate standard" must be used, or two standards of different lengths may be used, and the "ϕ" curve determined by the same process as is employed in thermometer calibrations.

The following experiment appears to prove conclusively that the temperature (velocity of translation of the molecule) in the case of the electrical discharge through rarefied hydrogen, must be remarkably low, though it may be premature to say that it is only a few degrees above that of the surrounding atmosphere.

Dry hydrogen, moderately pure at a pressure of about 1 mm. was contained in a vacuum tube made of hard glass whose section varied gradually from 15 mm. to 1 mm.

On the passage of the spark the characteristic spectrum of hydrogen was observed—the brightness increasing as the diameter diminished.

The light was directed into the interferometer, and after interposing a red glass it was found that the interference fringes (conc. circles) were much more clearly visible at a portion of the tube where the diameter was about 4 mm., and this portion was accordingly employed. The tube was then surrounded by a thin roll of sheet copper, except at the part examined, and this was heated by a Bunsen flame. The falling off in distinctness of the fringes was at once visible, and when a thermometer placed in contact with the copper showed a temperature below 300° C., the distance at which interference was still visible was about three-fourths of its value at the lower temperature. If the actual temperature in the first measurement is 50° or about 320° absolute, then the second temperature (supposing that the thermometer indicated—very roughly of course—the increase in temperature) was about 570°. The corresponding ratio of velocities is about $\sqrt{\frac{320}{570}} = \frac{3}{4}$, which agrees with the result of

experiments. If, on the other hand (as has been assumed by those who believe the temperature to be the efficient cause in producing incandescence), it be supposed that the first temperature was of the order of 7000°, the second could not have been more than 7300° and the corresponding ratio of velocity (and also of difference in path at which interference phenomena are still visible) would be $\sqrt{\frac{7000}{7300}} = .98$, which is so near unity that it would not be possible to detect the change.

Aside from this, the distance at which interference is visible in the case of hydrogen at low pressure is that which corresponds to a velocity of translation of from 2000 to 4000 meters per second; so that even from this measurement alone it would follow that the temperature must be between 0° and 300° C.

Since the pressure of hydrogen vapor in solar prominences (at any rate for the extremity farthest from the Sun's disk) must be extremely low, it follows that the greater part of the width of the corresponding spectral lines must be due chiefly to molecular velocities. Accordingly, an accurate measurement of this width will give the temperature of the prominence.

As the details of the methods by which the preceding experimental results were obtained have not yet been published it may be of interest to describe here the arrangements used for the source of light.

It gives me great pleasure to acknowledge in this connection the valuable assistance of my colleague, Mr. S. W. Stratton.

Many of the experiments were simple modifications of those described in a previous paper and no further notice of them is necessary. For substances whose point of volatilization was higher than the melting point of glass, the following device was employed:

A glass globe *G*, with a funnel-shaped aperture, *F*, closed by a piece of plate glass, is attached to the iron tube *T*, and the enclosed space is connected with a mercury pump, the tube being filled with mercury, forming a barometric column. This permits a long rod to rotate within, thus breaking contact

between the disk *W* and the spring *S*. Either *S* or *W* or both are of the material whose spectrum is to be investigated.

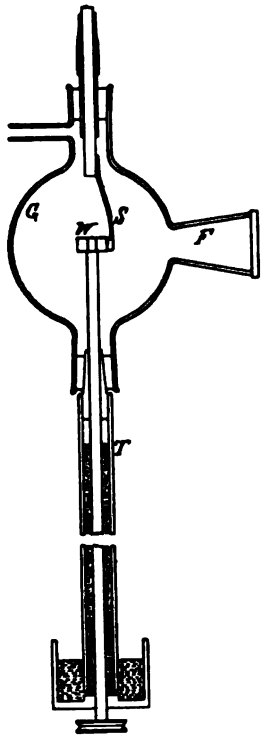

FIG. 3.

The extra-current spark, even with two or three storage cells, and with or without an induction coil, is sufficient to produce a very brilliant light, especially when the pressure within the globe has been reduced to a few millimeters.

Various modifications have been employed, especially one in which the break was produced by a reciprocating instead of a rotary motion. An essential point is to have all the parts readily detachable, so that the globe which rapidly becomes coated with a metallic deposit may occasionally be cleaned.

By constricting the attachment of the funnel at *O* to about 10 mm., the glass plate *P* may remain for days or weeks without cleaning.

It is hoped that future experiments along the lines here indicated may throw new light upon many of the important problems suggested.

THE MODERN SPECTROSCOPE. XIII.

A NEW MULTIPLE TRANSMISSION PRISM OF GREAT RESOLVING POWER.

By F. L. O. WADSWORTH.

IN order to obtain a large resolving power in a prism train it is necessary, with the ordinary arrangement, to considerably increase either the size or the number of prisms in the train. Which of these methods it is best to employ depends on the particular purpose for which the spectroscope is used. Thus in the case of the astronomical spectroscope, which has recently been discussed by the writer,[1] the balance of optical and mechanical advantages seem to lie on the side of a large number of small prisms, and the same considerations would point to this as the proper solution of the problem in the case of most laboratory spectroscopes also. On the other hand, since the angular dispersion of the spectrum is directly proportional to the number of prisms but is independent of their size (the refracting angle remaining constant) it follows that, for photographic work, in which it is necessary or desirable that a large portion of the spectrum should be in the field and in focus at once, the first method is the one to use. The use of large prisms is also absolutely essential in cases where very long slits are necessary, either for securing a spectrum of maximum total intensity, as in bolometric or photometric work,[2] or in the spectroheliograph, where a large image of the solar surface is to be photographed.

Unfortunately for such cases, the limit of size is soon reached, being set in the case of glass by the impossibility at present of

[1] "General Considerations Respecting the Design of Astronomical Spectroscopes," this JOURNAL, January, 1895.

[2] It was shown in the article referred to above, that the total energy in the spectral image depends directly on the height of the illuminated portion of the slit, and in order that great height may be used, a prism of large aperture, at least large vertical aperture, is essential.

properly annealing very large and thick blocks of glass,[1] and in the case of natural substances, such as quartz, rock salt, fluorite, etc., by the scarcity of material; it being an exceptional occurrence to find a large and perfect crystal which can be utilized for the purpose of prism or lens making. The largest regular spectroscope prisms (of refracting angle of 30° or over) of which the writer has knowledge are three which have been constructed by Mr. Brashear within the last few years; one a quartz prism of 30° refracting angle, 12^{cm} high and 13½^{cm} on the face, for the Harvard College Observatory;[2] a rock salt prism of 60° refracting angle, 18^{cm}.5 high and 13^{cm} on the face,[3] used in the recent investigations of the infra-red spectrum at the Smithsonian Astro-Physical Observatory; and the third a flint glass prism of the same refracting angle, 16½^{cm} high and 14^{cm} on the face, now in the possession of the same institution.

To even duplicate one of these would be a matter of considerable difficulty if not an impossibility at present, except in the case of the glass, and even in this case a good deal of expense, to say the least, would be encountered, as more than a year was spent by the makers of the glass before they succeeded in producing a block of sufficient homogeneity for the above prism. Trains of several such prisms are therefore practically unattainable.

In the case of such large prisms, therefore, it becomes a question of considerable importance to determine, first, the form of the prism and, second, the conditions of use which will enable a maximum of resolving power to be obtained with a given quantity of material, or, to put it more specifically, with a block of a certain size. Let r denote the resolving power, D the angu-

[1] The method of building up a compound prism of thin prismatic plates, recently described by the writer (see article "Some New Designs of Combined Grating and Prismatic Spectroscopes of the Fixed Arm Type," this JOURNAL, March, 1895), may perhaps enable larger prisms to be constructed than has heretofore been possible, but here again the question of expense soon sets a limit to unusual increase in size.

[2] Cut from a crystal belonging to the Boston Academy of Natural Science.

[3] Cut from one of the great blocks of rock salt shown in the Russian exhibit at the World's Fair.

lar dispersion, and ϕ the refracting angle of the prism, n the index of refraction, i the angle of incidence, and θ the angle of minimum deviation.

Then we have

$$r = (t_1 - t_2)\frac{dn}{d\lambda},$$

where t_1 and t_2 are the greatest and least thickness of material traversed by the refracted rays and $\frac{dn}{d\lambda}$ the dispersive power of the material; whence we see that for a simple prism of material of a given dispersive power, the resolution is independent of the refractive angle, and depends only on the length of base of the prism. Thus in Fig. 1 all of the prisms having a common base, *a*, *b*, have the same resolution, while the one of largest refracting angle contains by far the least material and could be cut from the smallest block.

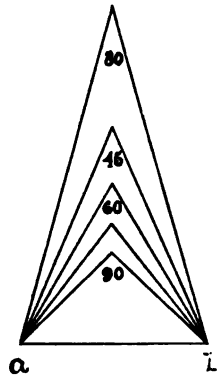

FIG. 1

The use of large refracting angles has also the very decided advantage, in the case of large prisms, of reducing very greatly the dimensions of all of the other parts of the spectroscope, especially the aperture of the collimating and view telescopes. This reduction in aperture is even more rapid than the diminution in volume of the prism, for it depends not only on the length of face, l, which decreases as the refracting angle ϕ increases, but

also upon i which is again a function of ϕ. Thus for unit base, $a, b = 1$ we have

$$l = \frac{1}{2 \sin \frac{\phi}{2}},$$

and for the horizontal aperture or curtate face

$$a = l \cos i = \frac{\cos i}{2 \sin \frac{\phi}{2}} = \tfrac{1}{2} \frac{\sqrt{1 - n^2 \sin^2 \frac{\phi}{2}}}{\sin \frac{\phi}{2}}.$$

The values of v, the volume of a prism of unit base, and of l, the length of face, for different retracting angles from 30° to 82½° are given in Table I, and the values of a for the same angles and for four values of n, *i.e.*, 1.5, 1.6, 1.7 and 1.8, in the third column of Tables II, III, IV and V. We see from these that in the case of the low index $n = 1.5$, the size of the telescopes required for a prism of 80° angle is only about $\frac{1}{10}$ that required for one of 30° of the same resolving power, while in the case of the higher indices the advantage is even more marked.

On the other hand, the increase in the refracting angle increases the loss of light by reflection, and also injures the definition by increasing the effect of defects in the surfaces of the prism. With such prism surfaces, however, as Mr. Brashear produces, the second effect is insignificant and the first need only be considered. If we suppose that the incident beam of light may be considered to be made of two polarized beams of equal intensity, one polarized in a plane perpendicular to the plane of incidence and the other in that plane, and if Δ' and Δ'' represent the respective losses in these two beams by reflection at the first surface, the total loss in the incident beam at the first reflection will be

$$\Delta = \tfrac{1}{2}(\Delta' + \Delta'') = \tfrac{1}{2} \frac{\sin^2 (i - r)}{\sin^2 (i + r)} + \tfrac{1}{2} \frac{\tan^2 (i - r)}{\tan^2 (i + r)}.$$

If the prism is placed at minimum deviation

$$r = \frac{\phi}{2}$$

$$\text{and } i = \sin^{-1} n \sin \frac{\phi}{2}$$

and the expressions for Δ' and Δ'' in terms of ϕ and n alone become

$$\Delta' = \frac{1}{2}\left(\frac{n^2 \cos\phi - 2n \cos\frac{\phi}{2}\sqrt{1 - n^2 \sin^2\frac{\phi}{2}}}{n^2 - 1}\right)^2$$

$$\Delta'' = \frac{1}{2}\Delta'^2\left(\frac{1 - n^2 \tan^2\frac{\phi}{2}\cos\phi - 2\, n \cos\frac{\phi}{2}\sqrt{1 - n^2 \sin^2\frac{\phi}{2}}}{1 - n^2 \tan^2\frac{\phi}{2}}\right)^2$$

For two faces the loss will evidently be

$$\Delta_2 = 1 - [\tfrac{1}{2}(1 - \Delta')^2 + \tfrac{1}{2}(1 - \Delta'')^2],$$

and for a number of faces, Δ_n, or a number of prisms $= \frac{n}{2}$

$$\Delta_n = 1 - [\tfrac{1}{2}(1 - \Delta')^n + \tfrac{1}{2}(1 - \Delta'')^n].$$

We have finally to consider the question of angular dispersion, for this is also a function of the refracting angle.

The expression for D is

$$D = \frac{d\theta}{d\lambda} = \frac{d\theta}{dn}\frac{dn}{d\lambda} = \frac{r}{a} = \text{Const. } f(\phi),$$

since r is itself independent of ϕ. The quantity $f(\phi) = \frac{1}{a}$ may be termed the dispersion coefficient of the prism.

The values of Δ', Δ'', Δ_1 and Δ_2, and $f(\phi)$ have also been computed for the same range of refracting angle and refractive index as given above for v and a, and will be found in Tables II, III, IV, and V. The relation between ϕ and Δ_2 is also shown in the curves of Fig. 2 and that between ϕ and v, and ϕ and D in the curves of Fig. 3.[1]

[1] In the latter figure the values of the ordinates for curve A, (which shows relation between v and ϕ), have been multiplied by 2, and the ordinates of curves, B, C, D, E, (showing relation between ϕ and D for indices of 1.8, 1.7 1.6 and 1.5 respectively), have been divided by 2 in order to make the relation between v and D more obvious.

TABLE I.

Refracting angle=ϕ	Face of Prism = l	Volume of Prism = v	Refracting angle = ϕ	Face of Prism = l	Volume of Prism = v
30°	1.932	.933	64°	.943	.400
35°	1.663	.793	68°	.894	.371
40°	1.462	.687	72°	.850	.344
45°	1.307	.604	75°	.822	.326
50°	1.183	.536	77½°	.799	.312
55°	1.082	.480	80°	.778	.298
60°	1.000	.433	82½°	.758	.285

TABLE II.

Repeating ang. = ϕ	Angle Incidence = i	Aperture or curtate face a	Δ'	Δ''	$\Delta_1 = \frac{1}{2}(\Delta' + \Delta'')$	Δ_2	Dispersion Coefficient = $\frac{i}{a}$
30°	22° 51′	1.780	.0495	0.0315	0.0405	0.0793	0.5618
35°	26° 49′	1.484	.0537	.0282	.0409	.0801	0.6738
40°	30° 52′	1.255	.0591	.0244	.0417	.0815	0.7970
45°	35° 2′	1.070	.0662	.0200	.0430	.0837	0.9348
50°	39° 20′	.915	.0754	.0158	.0456	.0883	1.093
55°	43° 45′	.782	.0884	.0109	.0497	.0953	1.278
60°	48° 35′	.661	.1057	.0046	.0552	.1047	1.512
64°	52° 39′	.572	.1255	.0012	.0633	.1188	1.747
68°	57° 1′	.487	.1529	.0000	.0765	.1412	2.054
72°	61° 51′	.401	.1937	.0045	.0991	.1795	2.492
75°	65° 57½	.335	.2401	.0168	.1285	.2280	2.988
77½°	69° 52′	.275	.2974	.0414	.1693	.2938	3.636
80°	74° 37′	.206	.3905	.1000	.2452	.4093	4.846
82½°	81° 30′	.112	.5902	.2965	.4433	.6686	8.922

TABLE III.

30°	24° 28′	1.758	0.0670	0.0410	0.0540	0.0993	0.569
35°	28° 45½′	1.458	.0730	.0363	.0547	0.1060	0.686
40°	33° 11′	1.223	.0812	.0308	.0560	.1083	0.817
45°	37° 45′	1.033	.0918	.0243	.0581	.1116	0.968
50°	42° 33′	.873	.1036	.0171	.0603	.1151	1.145
55°	47° 33′	.731	.1259	.0095	.0677	.1274	1.368
60°	53° 8′	.600	.1566	.0030	.0798	.1473	1.667
64°	57° 59′	.500	.1919	.0000	.0959	.1735	1.999
68°	63° 28′	.399	.2462	.0055	.1258	.2213	2.504
72°	70° 12′	.288	.3426	.0390	.1908	.3222	3.470
75°	76° 55′	.186	.4863	.1392	.3127	.4976	5.378

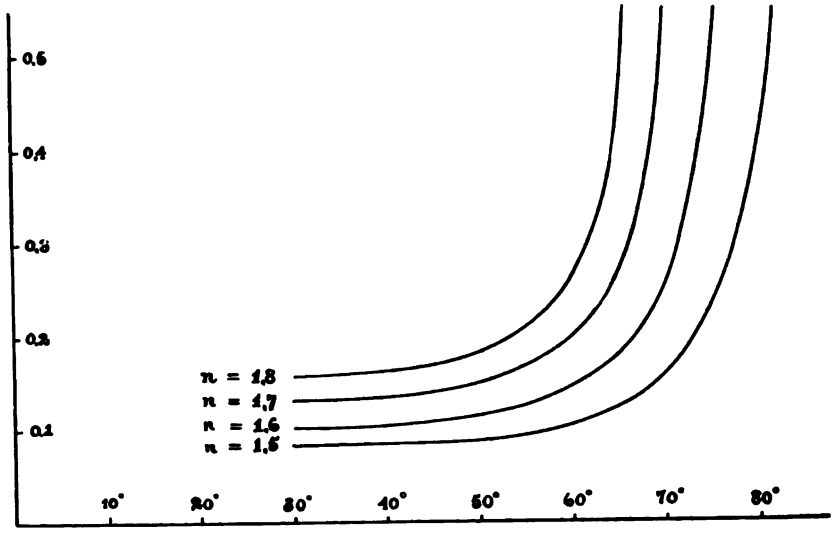
0.5
0.4
0.3
0.2
0.1
n = 1.8
n = 1.7
n = 1.6
n = 1.5
10°
20°
30°
40°
50°
60°
70°
80°

FIG. 2

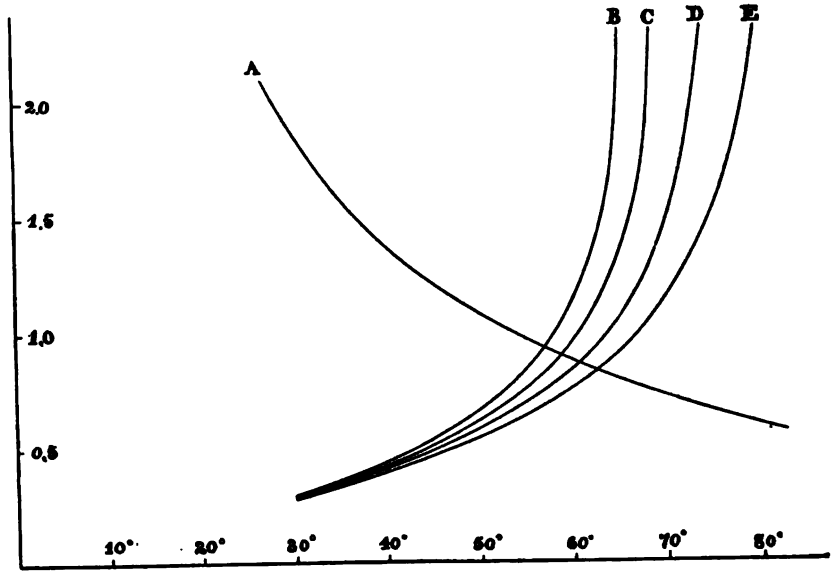
A
B
C
D
E
2.0
1.5
1.0
0.5
10°
20°
30°
40°
50°
60°
70°
80°

FIG. 3

TABLE IV.

Repeating ang. $= \phi$	Angle Incidence $= i$	Aperture or curtate face a	Δ'	Δ''	$\Delta_1 = \frac{1}{2}(\Delta' + \Delta'')$	Δ_2	Dispersion Coefficient $= \frac{1}{a}$
30°	26° 6′	1.735	0.0857	0.0506	0.0682	0.1214	0.5764
35°	30° 44½′	1.429	.0901	0.0441	0.0670	0.1292	0.6998
40°	35° 33′	1.189	.1057	.0364	0.0710	0.1358	0.8408
45°	40° 35′	.992	.1212	.0275	0.0743	0.1416	1.008
50°	45° 55½′	.760	.1422	.0175	0.0799	0.1494	1.315
55°	51° 43′	.671	.1744	.0073	0.0909	0.1665	1.491
60°	58° 13′	.527	.2238	.0003	0.1120	0.1991	1.899
64°	64° 16′	.410	.2885	.0048	0.1467	0.2517	2.441
68°	71° 55′	.277	.4084	.0493	0.2289	0.3731	3.608
72°	88° 28′	.228	.9251	.7983	0.8617	0.9772	4.394

TABLE V.

30°	27° 46′	1.709	0.1059	0.0600	0.0829	0.1585	0.5850
35°	32° 46′	1.398	0.1172	0.0515	0.0843	0.1605	0.7152
40°	38° 0′	1.152	0.1328	0.0412	0.0870	0.1643	0.8680
45°	43° 32′	.900	0.1543	0.0292	0.0917	0.1711	1.111
50°	49° 31½	.768	0.1855	0.0152	0.1003	0.1834	1.302
55°	56° 13′	.602	0.2337	0.0036	0.1187	0.2100	1.661
60°	64° 10′	.436	0.3177	0.0027	0.1273	0.2700	2.294
64°	72° 32′	.283	0.4507	0.0491	0.2499	0.3971	3.532
66°	78° 38′	.181	0.5914	0.1644	0.3779	0.5675	5.528

An inspection of these tables or better, of the curves, will at once enable us to determine the best value of the refracting angle to use in any given case. Since the main object of using a single large prism rather than several small ones is to reduce the angular dispersion, it follows that if this object is of primary importance we cannot use prisms of refracting angle much exceeding 65° for materials of low refractive index or 55° for materials of high, since beyond this point any small increase in the angle increases greatly the dispersion without appreciably diminishing the volume. Large refracting angles are likewise objectionable on account of the greatly increased loss of light by reflection at the surfaces, although this increase is not quite so rapid as in the case of dispersion. If in lack of a better criterion we choose as a limiting angle that at which a tangent to the curve makes an angle of 45° with the axis, we find from Fig. 2

that this corresponds in the case of $n = 1.5$ to $\phi = ,70°$ and for $n = 1.8$ to $\phi = 58°$.

On the other hand it is readily seen that there is no great gain in reduction of dispersion and almost none in reduction of loss by reflection, by decreasing the angle of the prism below 60°; in fact, in the case of a prism of refractive index of 1.5 the latter loss is diminished by only about 2½ per cent. by decreasing the angle from 60° to 30° while the aperture and dimensions of the other parts of the spectroscope are increased nearly three times.

If the condition of small dispersion is of less consequence then it is also readily seen that the refracting angle may be increased with decided advantage until it reaches the limit imposed by the diminution in the brightness of the image. When there is plenty of light we may even use angles as large as 80°, in which case the telescopes and dimensions of the other parts of the spectroscope are less than one-third as large as for an angle of 60° and less than one-eighth those required for a 30° prism. Or, we may suppose that we have the condition of constant aperture given to compare the relative efficiencies of prisms of different refracting angle. To obtain the same resolving power in this case it is evident that we must increase the number of the prisms of the smaller refracting angle in the ratio of $a_1 : a_2$, where a_1 and a_2 are the apertures of the two prisms, each of unit base and of angles ϕ_1 and ϕ_2 respectively. If this is done it is also evident that the dispersion of the two arrangements will be the same, and we have only to compare the relative loss of light and the relative volume of material. Take for example a prism of index $n = 1.5$, of refracting angle of 76° and of given aperture A. In order to obtain the same resolving power with 60° prisms of the same index and aperture two prisms would be required, since $a_1 : a_2 :: 3.15 : 1.51$. The relative volumes of the one prism of 76° and two prisms of 60° are evidently as 0.65 :0.87 and the relative loss of light by reflection as 0.23 :0.19.[1] The advantage as regards decrease in material and weight and

[1] See Pickering's tables, *Am. Jour.*, 45.

increased simplicity is therefore very decidedly in favor of the single prism of 76°, and the increased loss of light (4 per cent. of total) is insignificant in comparison.

The angle of the prism having been determined upon by a consideration of the relative importance of these conflicting conditions, it next becomes important to consider how this prism (supposing only one at our disposal) may be used so as to still further increase its resolving power. It is evident that this can be done only by employing the principle of multiple transmission, *i. e.*, by passing the light more than once through the prism. So far as the writer is aware no form of spectroscope has so far been proposed in which more than two transmissions through the same prism have been made possible. Of the double transmission form the oldest and most frequently used is an instrument of the Littrow type,[1] which has been shown to be only one variety of a large class of single prism mirror combinations.[2]

A more recent form is that which was quite recently invented and described by Newall,[3] in which all three faces of the prism are polished, and the rays, after a double reflection, enter at the face adjacent to that from which they emerge, and retraverse the prism at an angle of almost 60° to their first passage. This arrangement has the one great advantage of widely separating the incident and the doubly refracted beam, and thus, by allowing separate collimating and view telescopes, avoids the main difficulty with the original Littrow instrument —*i. e.*, a general illumination of the field by reflection from the surfaces of the collimating lens. The instrument, how-

[1] The so-called modified forms of Littrow instrument devised by Young, Lockyer, Browning, Grubb and Hilger are really not double transmission instruments at all, since the rays pass through any one portion of the prism but once. The arrangement in fact is simply equivalent to two or more prisms placed one on top of the other instead of one after the other, and it is evident that, for a given resolving prism, just as many prisms, or rather just as much material, is necessary in the one case as in the other.

[2] "Fixed Arm Spectroscopes." *Phil. Mag.*, October, 1894.

[3] *Astronomy and Astro-Physics*, April, 1894, p. 309.

ever, has one disadvantage which is fatal to accurate spectrometer work—the prism can be placed in a position of minimum deviation for only one particular wave-length. It was while working with a modified form of Littrow spectroscope which has been elsewhere described[1] that a form of multiple transmission spectroscope first suggested itself that was not only free from the disadvantages above alluded to, but which allowed of six transmissions through the same prism, thus making it equivalent in resolving power and dispersion to a train of six prisms of the same size. This form, it is true, involves the use of seven plane reflectors, and the loss of light is therefore somewhat greater than in the case of a simple train. It is, however, not presented as preferable to the train when the latter is possible, but as the only substitute for it when only one prism can be had, either because of the expense, or, what is still more serious, the lack of material. Moreover, the objections to the use of this large number of reflecting surfaces are not so serious as might be imagined, first, because the loss of light from a well-silvered glass reflector or speculum is small as compared with the loss from the faces of the prism itself; second, because the reflectors are so arranged in pairs that displacements of the ray by accidental displacements of the reflectors may be almost wholly eliminated; third, because such reflecting surfaces may now be obtained so perfect that there is no sensible injury to definition of an image, after even a far greater number of reflections than here involved, and, finally, because, the cost of such reflectors is *very* much less — probably not more than one-fourth — the cost of an equal number of prisms of the same quality.

The diagrammatic plan of the arrangement of prism and reflectors is shown in Plate IX, Fig. 4 and also in Fig. 5, in which the movable system has been rotated into the zero position in order to show the method of adjustment of the train. The path of the two extreme rays is shown by dotted lines, Fig. 4, and is from the collimator *A*, through the prism to the mirror *B*, thence to *C*, thence to *D* (if it passed from *B* directly to *D*, the position of the

[1] *Phil. Mag.*, July, 1894.

PLATE IX.

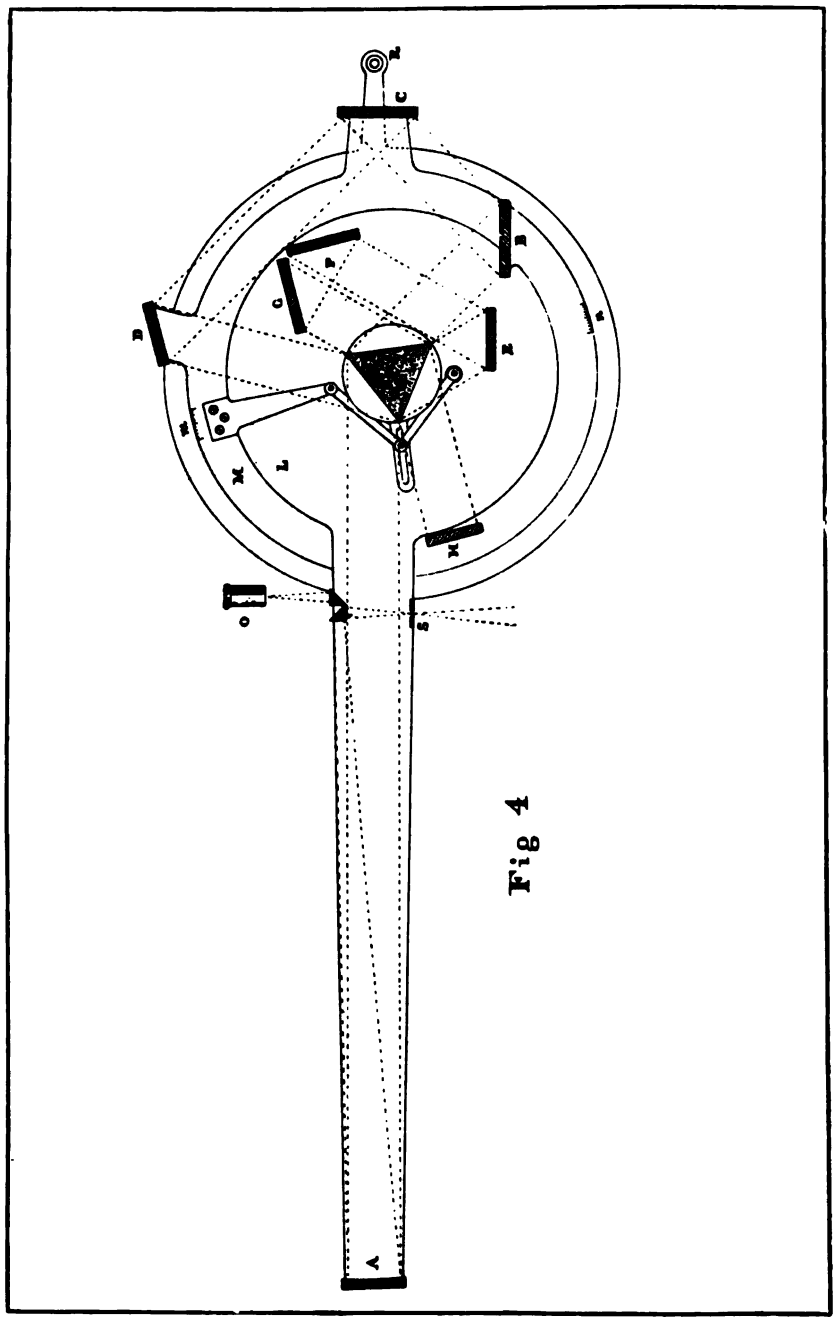

Fig 4

two rays with respect to the refracting edge would be reversed at the second transmission, and the dispersion produced at the first thereby neutralized at the second), thence through the prism again from the first face to the third, thence to the reflectors *E*, *F*, *G*, in succession, thence through the prism a third time, entering at the second and emerging at the third face, in the direction of the arrow.

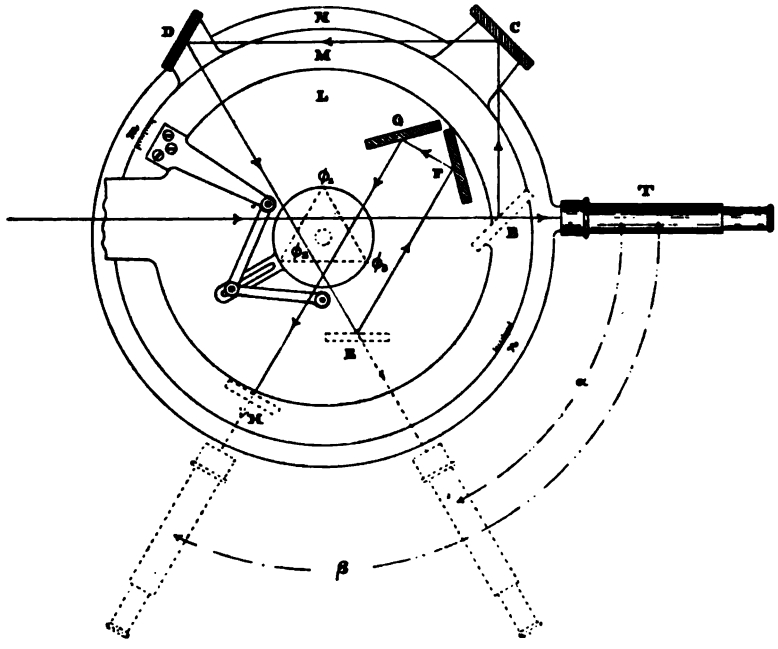

FIG. 5

By placing a seventh reflector at *H*, normal to the emergent ray, the latter may be made to retrace its path, traversing the prism three more times and finally emerging at the first face in the opposite direction to that in which it entered, as in the original Littrow form. The spectrum is formed and observed by any of the methods which have been proposed for this part of the Littrow instrument, best perhaps by the concave mirror

arrangement which has been previously described[1] by the writer, and which is indicated diagrammatically in the drawing. The first set of reflectors, B, C, D, and the final reflector, H, are all fixed on the vernier circle, M, of the spectroscope and rotate together with it, and the second set of reflectors, E, F, G, are mounted together on an inner table, fixed to the arm which carries the collimator A, slit s, and observing eyepiece or plate-holder, o. The prism itself is mounted on a third table, connected with the outer movable table, M, by means of the usual minimum deviation attachment. The outer divided circle, N, also rotates and has attached to it an arm, R, for a small observing telescope, which is used only in the preliminary adjustment.

It is evident that with this arrangement the ray is transmitted each time at minimum deviation (provided the preliminary adjustments have been properly made), no matter what be the angle of rotation of the vernier circle, *i. e.*, no matter what part of the spectrum be brought to the center of the field. The maximum angle of rotation (or deviation of the first ray), is evidently 60°, but this in the case of a 60° prism corresponds to an index of $n = \sqrt{3} = 1.73+$, which is larger than the index for the shortest wave-lengths of the visible spectrum, in either double-double extra flint or in carbon bisulphide. This angle of rotation, therefore, is amply sufficient for any ordinary prism.

In order to make the preliminary adjustments of this system, the three prism angles ϕ_1 and ϕ_2, and ϕ_3 are first measured by the usual method. The vernier circle is then rotated to the position shown in Fig. 5 and clamped, the prism and first reflector removed and the observing telescope T brought into the line of collimation in the usual manner.[2] The mirror B is then replaced and E is removed, the telescope moved through an angle $\alpha = \frac{1}{2}(\phi_1+\phi_2)$ and the mirror B adjusted until the image of the slit again

[1] "An Improved Form of Littrow Spectroscope," *Phil. Mag.*, July, 1894.

[2] Instead of removing the prism the image of the slit may be viewed directly through it by a double refraction and reflection. This would be allowable only when the prism is very nearly equiangular.

falls on the cross wires. Then E is replaced, H removed and the telescope set at the angle $\beta = \phi_2 + \frac{1}{2}(\phi_1 + \phi_3)$, and the slit image again brought to the cross wires by adjusting the mirror E last replaced. Finally the mirror H is replaced and adjusted until the final slit image coincides with the slit itself. The circle is then unclamped and rotated to the position of use and the prism replaced and adjusted to the position of minimum deviation in the usual manner.

It will be noticed that the light which is reflected from the surfaces of the prism falls directly upon the reflectors B, D, E, and G, and would finally, after traversing the prism in the opposite sense, be sent back into the field of the observing eyepiece. To avoid these secondary spectra the prism is tilted very slightly out of the vertical. As the angle of deviation is doubled by reflection an inclination so slight as to be entirely without effect on the transmitted ray will suffice to throw these reflected rays entirely out of the field.

It is evident that by replacing B, E, or H by a telescope we may obtain an ordinary one-transmission, two-transmission or triple transmission train at will. The double transmission train is shown in Fig. 6, in which A is the collimating and T the view telescope, B the reflector which receives the rays after the first transmission through the prism, and P a doubly-reflecting prism which may be substituted for the two reflectors C, D, of Figs. 4 and 5. The reflectors B and P revolve together on the vernier circle of the spectroscope, but the view telescope T remains fixed in position, just as in the Littrow form, although it is unlike this in being quite distinct from, and placed at a considerable angle to, the collimator. It is to be observed that in this form there are no reflections from the prism faces which can reach any part of the field of the view telescope. By placing a fixed reflector at H instead of the view telescope, and placing the latter in the Littrow position, *i. e.*, coincident with the collimator, we obtain a quadruple transmission train which is also free from any troublesome reflections from the prism faces. In Fig. 7 is shown a triple transmission train which is the same in arrange-

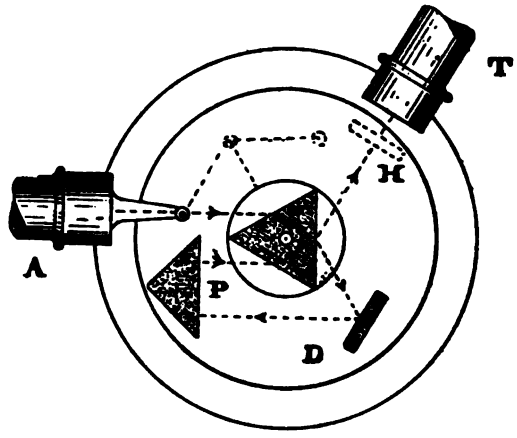

Fig. 6

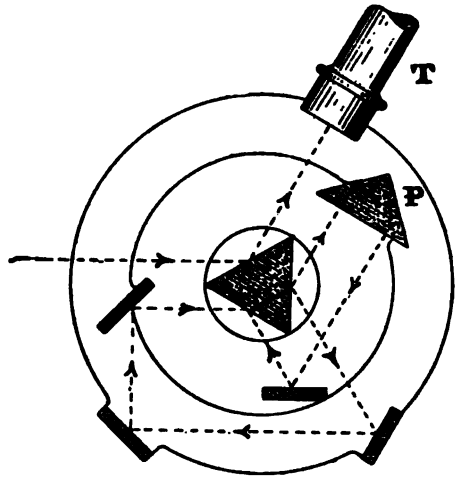

Fig. 7

ment as that first shown in Fig. 5, save that the reflector *H* is replaced by the view telescope, and the two reflectors *F*, *G*, by the prism *P*, and that the order of transmission has been altered, so that after the third transmission the ray emerges from the first face instead of the third as in Fig. 4. This is a convenient arrangement in many respects, for the slit image formed by direct reflection from the first prism face answers admirably for an index. In this case there are secondary reflections from the

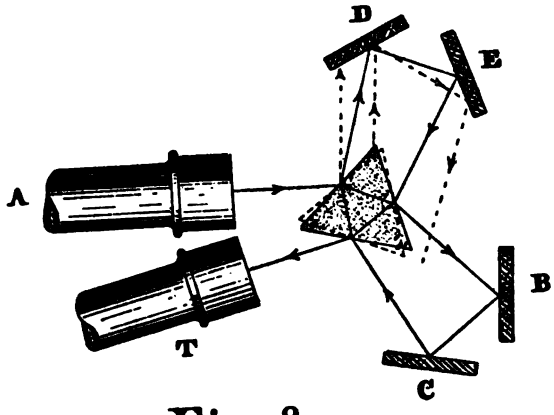

Fig 8

other faces which finally reach the view telescope, but only after so many reflections and transmissions as to be hardly noticeable. They may, as before, be entirely avoided if desired, by tilting the prism faces very slightly out of the vertical.

In case it is desired to work with only one particular wave-length, as in the examination of some individual line in the spectrum, or, as in the use of the spectroheliograph, the number of reflectors may be reduced to two for a double transmission, or four for a triple transmission train by employing the arrangement shown in Fig. 8. Here, of course, the prism must be placed at minimum deviation for the one particular wave-length with which we are concerned, but the index of refraction of the material being known for this wave-length, it is easy to calculate the

proper relative position of the prisms and mirrors in order to secure this result. In Fig. 8, for example, the mirrors are shown in the proper position for transmitting a ray for which the refractive index of the prism is 1.6, which is very nearly the index of the lightest flint glass for the K line of the solar spectrum, the line ordinarily used in spectroheliographic work.

When this arrangement is used for the latter class of work the secondary reflections from the prism faces cannot well be avoided by tilting the latter as in the previous cases, for the field is so wide that too great an inclination would be necessary. It is therefore better to accomplish this object by turning the prism slightly out of minimum deviation, as in Fig. 8. A change of position of 2° changes the angle of the reflected ray by four degrees, or about one part in fourteen, and hence if the distance traversed by the ray between two successive transmissions is fourteen times the aperture, and the prism is turned in such a direction as to diminish the angle of incidence, the light reflected from any one surface will pass entirely outside the next one, as shown by the dotted lines in Fig. 8. This change from the position of minimum deviation will of course also change the angle of deviation of the refracted ray. We know from observation that this change will be small, but in order to determine accurately its amount it is interesting and important to determine the relation between the angle of incidence, i, and the angle of deviation θ.

This will enable us to calculate the necessary small change in the position of the mirrors B, C, D, E, and will also enable us to state how accurately a prism must be adjusted to minimum deviation in order to secure a given degree of accuracy in spectrometric work.

The general expression for the deviation θ' of a prism of angle ϕ is

$$\theta' = i' + i'' - \phi,$$

where i' = angle of incidence on the first face,
and i'' = angle of incidence on the second face of the prism.
If we call δ the angle by which the prism has been turned out of minimum deviation, then

$$i' = i + \delta$$

and expressing the preceding relation in terms of i, δ and ϕ only we obtain

$$\theta' = i + \delta - \phi + \sin^{-1}\left[n \sin\left(\phi - \sin^{-1}\frac{\sin(i+\delta)}{n}\right)\right] \qquad (1)$$

at minimum deviation $\delta = 0$ and the expression reduces to

$$\theta = 2i - \phi \qquad (2)$$

and the problem is to find the difference between (1) and (2) expressed as a function of δ, or

$$\theta' - \theta = \Delta\theta = f(\delta).$$

If δ is a small angle we have, to a high degree of approximation,

$$\sin^{-1}(i+\delta) = \sin^{-1} i + \sin^{-1}\frac{\delta}{\sqrt{1-\left(i+\frac{\delta}{2}\right)^2}}$$

$$= \sin^{-1} i + \sin^{-1}\delta\left[1 + \tfrac{1}{2}\left(i+\frac{\delta}{2}\right)^2 + \tfrac{3}{8}\left(i+\frac{\delta}{2}\right)^4 +\right.$$

Expanding (1) and making use of this general relation and neglecting terms higher than the second order we finally obtain by a series of successive substitutions, which it is unnecessary to develop in detail,

$$\theta' = 2i - \phi + \sin^{-1}\left\{\delta^2\left[1+\frac{\delta^2}{2}\right]\frac{\sin\frac{\phi}{2}\left[n^2 - \left(1+\sqrt{1-n^2\sin^2\frac{\phi}{2}}\right)\right]}{n\cos^2\frac{\phi}{2}\sqrt{1-n^2\sin^2\frac{\phi}{2}}}\right\}$$

whence, since δ is itself small,

$$\Delta\theta = \sin^{-1}[\delta^2 f(\phi, n)].$$

For any given prism $f(\phi, n) =$ constant and since the angle $\sin^{-1}\delta^2$ is nearly equal to δ^2 itself we may say that the relation between $\Delta\theta$ and δ is nearly parabolic.

For a 60° prism the expression $f(\phi, n)$ reduces to

$$f(\phi, n) = \text{Const.} = \tfrac{1}{8}\frac{(n^2 - 1 + \cos i)}{n\cos i},$$

which with the aid of the preceding tables is readily computed for different values of n. We have

for $n = 1.5$ Const. $= 0.395$
for $n = 1.6$ Const. $= 0.667$
for $n = 1.7$ Const. $= 1.015$
for $n = 1.8$ Const. $= 1.525$

The values of $\Delta\theta$ have been computed for values of δ varying from 5′ to 2° and are given in Table VI.

TABLE VI.

δ	δ^2	$\Delta\theta$			
		$n = 1.5$	$n = 1.6$	$n = 1.7$	$n = 1.8$
5′	.00000211	0″.17	0″.3	0″.45	0″.67
10′	.00000846	0″.70	1″.2	1″. 8	2″. 7
15′	.0000190	1″.57	2″.6	4″. 0	6″. 0
30′	.0000761	6″.26	10″.5	16″. 0	24″. 0
45′	.0001713	14″. 1	23″.6	36″. 0	54″. 0
60′	.0003045	25″. 0	42″.0	1′ 4″	1′ 36″
1° 30′	.0006854	55″. 0	1′ 35″	2′ 24″	
2° 0′	.001218	1′ 40″	2′ 48″		

A displacement of 2° from the position of minimum deviation in the preceding case therefore changes the direction of the transmitted ray by only about 2¾′, a change so small that no readjustment of position of the mirrors is necessary.

The above table also shows at a glance the degree of accuracy required in setting the prism to minimum deviation. If, for example, we desire to make spectrometric measurements to within 10″ with a prism whose index is 1.6 the prism does not need to be set closer than 30′ to the position of minimum deviation,[1] or, to put it in another way, the observing telescope may be moved through about 1° (30′ on each side of minimum deviation position) without a readjustment of the prism.

UNIVERSITY OF CHICAGO,
September, 1895.

[1] It is perhaps well to call attention to a typographical error at the close of my article in the March number, Vol. I., p. 247, of this JOURNAL. Instead of the deviation from the minimum being 0″.3 for $\delta = 5'$, as it there appears, it should be 0″.03 for $\delta = 5'$. The adjustment of the separate prisms to parallelism in this case does not indeed need to be closer than about 15′ in order that the displacement of the different spectral images shall not exceed the resolving power of even the great Yerkes telescope when used with such a combination of three as is there shown.

CLOSE BINARY SYSTEMS AND THEIR RELATION TO SHORT PERIOD VARIATIONS.

By ALEXANDER W. ROBERTS.

THE discovery of the orbital revolution of δ Cephei, by M. Bélopolsky, is an advance in our knowledge of short period variables of no ordinary importance. Previous to this discovery the movements of Persei and β Lyrae had been investigated very fully by Pickering, Vogel and Lockyer, and their researches pointed clearly to an intimate connection between the orbital movement and the light variation of the two stars. But the variation of β Persei was considered to be due to eclipse long before the spectroscope gave its testimony to the accuracy of the theory; and as regards Lyrae it is a variable, *sui generis*, and an investigation of its motion can only in an indirect way assist us to a satisfactory explanation of short period variables—using the term to denote those variables of short period whose light is constantly increasing or decreasing.

With δ Cephei the case is different. It is a good example of a short period variable of constant variation, and any new light or any new discovery bearing directly on the problem of its variation will have a wider application than merely its reference to this particular star. That δ Cephei is a binary star, that it is a binary with a period equal to that of its light variation, are facts which have to do with the large majority of short period variables, for in no important feature is the variation of δ Cephei different from the variation of at least three-fourths of the variables of this class.

So far as my own knowledge of the subject serves me the light curve of δ Cephei given by Professor Schur in the *Astronomische Nachrichten*, No. 3282, may be taken as typical of twelve out of the seventeen southern variables of short period. We have the well known rapid rise to maximum—one of the most striking characteristics of short period variation. There seems

to be no exception to this rule, as an examination of the elements of variation in Chandler's catalogue will testify. With some the rise is exceedingly rapid, as, for instance, in the case of the southern star 3911, η Carinae, where the rise to maximum is less than one-sixth of the time from maximum to minimum; with others again the ratio is one nearly of equality, but with none is the time of decrease less than the increasing period. Then again there is the regular period, and the constancy of amplitude—an amplitude always less than 2.0 mag., oftenest 1.0 or 0.8 mag.—also marked features of short period variation. Only four short period variables seem to show departure from this rule of regular constancy of period and limits of variation, viz.,T Monocerotis, W Virginis, R Triang. Australis, X Cygni.

There are other minor points of family likeness which characterize short period variables, but the two just mentioned are the most salient points.

Now, it is but natural to conclude that some common cause must operate in producing this common type; in the case of δ Cephei its variation is intimately connected with its revolution.

It may be a kind of *per saltum* reasoning to consider all short period variation, with its peculiar characteristics and features, to be due to orbital movement, but to my own mind, immediately on reading of M. Bélopolsky's discovery, the conclusion was clear, inevitable, and the purpose of the present paper is briefly and in a general way to indicate how orbital movement under certain conditions would produce such phenomena as we are familiar with in short period variation.

There are three ways in which revolution would operate in producing changes in the magnitude of one or both members of a binary system:

(1) When the plane of the orbit passes through the Earth we will have eclipse. The eccentricity of the orbit, the ratio of the light of each star per unit of surface, the relative size of the two stars, together with a slight inclination of the plane of the orbit to the line of sight are the chief factors in determining the amount and nature of eclipse at both minima. Theoretically

there is always a second minimum. When the secondary star is a dark body, however, or when the plane of the orbit is slightly inclined to the line of sight, the orbit *very* eccentric and the line of apsides almost coincident with the line of sight, there will be no change at the secondary minimum.

The particulars of variation will vary with each star, but the general type will be the same:—a constant period, a period of rapid rise and fall, another constant period, and then, probably, a second rapid rise and fall, less pronounced than the first.

A simple consideration of the limitations which must always operate in variation of this class will show clearly that while eclipse will explain with partial fullness the variation of the 15 known Argol variables[1] it will not serve as an explanation of short period variation similar to that of δ Cephei. Eclipse may, and probably does, operate in influencing the variation of such variables as η Acquilae and R Sagittae, but it is certainly not the primary cause of their variation.

(2) In the case where a large dark body revolves around a central luminous one, there must be phases, the amount of phase depending on the distance of the stars from one another, the inclination of the orbit, and the reflective qualities of the dark body.

In almost every case, however, these phases would be practically invisible from our system; or rather any increase or diminution in the combined light of both stars would be so small in comparison with the constant light of the primary star as to be imperceptible by the most refined methods of photometric measurement. Under the most favorable circumstances of proximity and light-reflecting qualities of the companion star, it is certain that the change in the light from any system, owing to this cause, would not amount to 0.1 mag. We may, therefore,

[1] Fourteen of these are given in Chandler's Catalogue; the fifteenth is the Southern star X Carinæ, the period of which is 1.083 days. It is no small proof of the care and ability which Mr. Chandler has brought to bear on his Second Catalogue of Variable Stars that he should at once have detected the want of conformity between the Harvard measures and my first elements of this star. The photographic measures are in substantial agreement with the period now given.

leave out of consideration stellar phases as even a minor factor in short period variation.

(3) The third, and to my mind, most effective influence in producing short period variation may more clearly be indicated by referring briefly to the probable orbit of δ Cephei as obtained by Bélopolsky. The form of the orbit is represented in Fig. 1, or rather the projected orbit, for what the inclination of the orbit is we cannot tell.

The ascertained elements are:

Angle between the ascending node and the radius vector	90°
Angle between the ascending node and periastron	88°
Eccentricity	0.514
Projection of the semi-major axis	620,000 miles
Periastron passage	1.05 days after minimum.

The inclination is unknown, but the theory of eclipse would require a value not far from 90°; but such an assumption leads to a value of the mass of δ Cephei that is altogether out of the question.

That δ Cephei has scarcely twice the weight of Jupiter is surely so great an improbability that it makes impossible our acceptance of the supposition on which it rests.

Indeed, the smallest value of the mass of δ Cephei which we could accept, as in harmony with what we know of the mass and light of other systems, would necessitate a value of the inclination considerably less than 45°. Yet another insuperable difficulty in the way of our accepting the eclipse theory of variation is the position of the minimum and maximum phases. The minimum phase on this hypothesis ought to take place at *A* or *P*, Fig. 1: M. Bélopolsky's investigation places it at *m*.

It is unnecessary to point out the very obvious fact that in an orbit such as we have in Fig. 1, however large the component bodies, and however small the orbit, the variation would not be continuous.

There would be comparative constancy when the companion was in quadrature. But such periods have not been noticed by

any observer: all trustworthy observers of δ Cephei bear testimony to the constant waxing or waning of its light.

It is evident, therefore, that the assumption that the inclination is 90° is untenable; and this being so eclipse has no part or lot in the variation of δ Cephei.

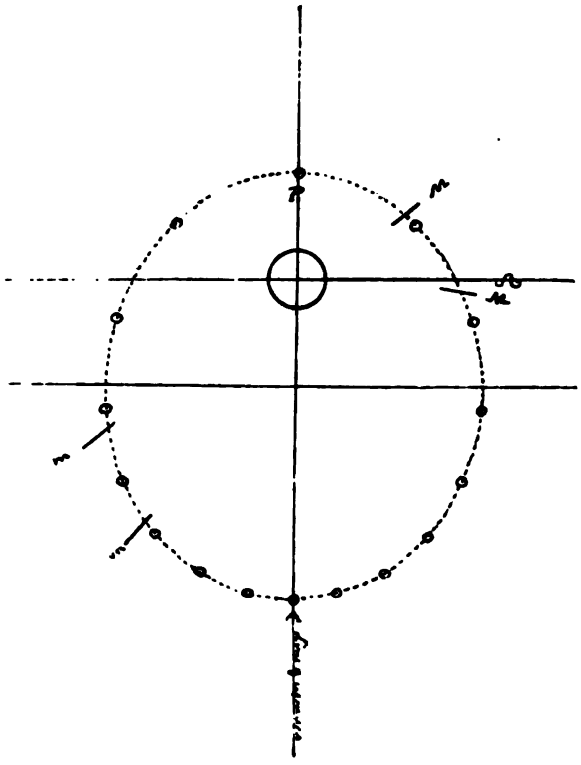

FIG. 1. Orbit of δ Cephei.[1]

The other elements rest on more secure foundation and may, I think, be accepted with confidence.

Now in such an orbit it is evident that at and near apastron,

[1] *M* and *m* are the points on the orbit where, according to M. Bélopolsky, the star passes its maximum and minimum phases. The circular divisions divide the orbit into 16 equal parts as regards time.

the heat which falls upon the companion star will be nine times less than at periastron.

It is but reasonable to suppose that as the companion passes from apastron to periastron some considerable increase in temperature will take place.

The amount of heat transferred from the primary body to the secondary will depend on the capacity for heat of the secondary body. It is also in accordance with the laws of conduction—and we find the laws exemplified each day in the maximum and minimum hours of daily temperature—that the heat of the fainter star will not reach its maximum till *after* the star has passed periastron, the heat continuing to accumulate until the quantity of heat which escapes from the star is greater than that which enters it. And the minimum point will not be reached at apastron passage, but at some point further on, where the amount of inflowing heat equalizes the outflowing. After this point is passed the companion will increase *rapidly*, the rapidity depending on the eccentricity of the orbit, as it is now nearing periastron.

M. Bélopolsky's results put the maximum and minimum points at M and m (Fig. 1).

If the maximum took place at M_1, and the minimum at m_1, it would be more in harmony with the theory I have sketched out here.

Accepting M. Bélopolsky's places, however, it is suggested that the considerable increase of temperature which the companion would necessarily receive on passing periastron P, does not cease to operate in causing change, or, perhaps, that these changes do not attain their full force and vigor till twelve hours after passing P, that is at M.

The star then begins to cool down, the changes in the photosphere become less violent; the emitted light slowly decreases, until at last the star passes the apastron, A.

The increasing heat of the central star is not felt until the companion is a good way on in its return journey. At m the heat begins to tell. The companion brightens up; its light

rapidly increases, until the critical point *M* is again reached, and then the cycle begins anew.

The changes produced by the proximity of the two stars would not be confined to the fainter one alone. There would be action and inter-action, tidal currents, and a different set of conditions, mechanical and chemical, would be in operation at each periastron passage.

This explanation seems to me not only a natural one, but one in keeping with the principal features of short period variation:

(1) A rapid rise to maximum.

(2) Constant variation.

(3) Narrow limits of variation.

It is certainly not a full explanation: it will not meet satisfactorily a variation of say 1.5 mag. or 2.0 mag. unless we suppose, as indeed we are bound to do, that the nearness of the two stars at periastron gives rise to tidal disturbance and consequent increase of temperature. In the case of δ Cephei, if we consider the light of the primary star to be 5.0 and the companion between 7 and 8 mag., then the combined light of both would be 4.9 mag.

At periastron the star would be raised to near the 5 magnitude, giving a combined light of 4.2 mag., a gain of 0.7 mag.

There remains over 0.5 mag. still to be accounted for, and although we might very well claim that this is due to a corresponding change in the light of the primary star, it is, perhaps, as well to leave it as a flaw in the theory.

It is beyond the province of this paper to attempt a full explanation of the theory in its application to variation not in accordance with the general type. There is a departure from the general form of regular light curve so marked, however, that it requires to be dealt with. R Sagittae and η Aquilae may be taken as good examples of this sub-class, of which a secondary maximum is the most striking characteristic. The light curve of η Aquilae, according to Professor Schur, is given in Fig. 2. If now we complete the form of the light curve, so as to make it correspond to the general type, we find that the departure can be

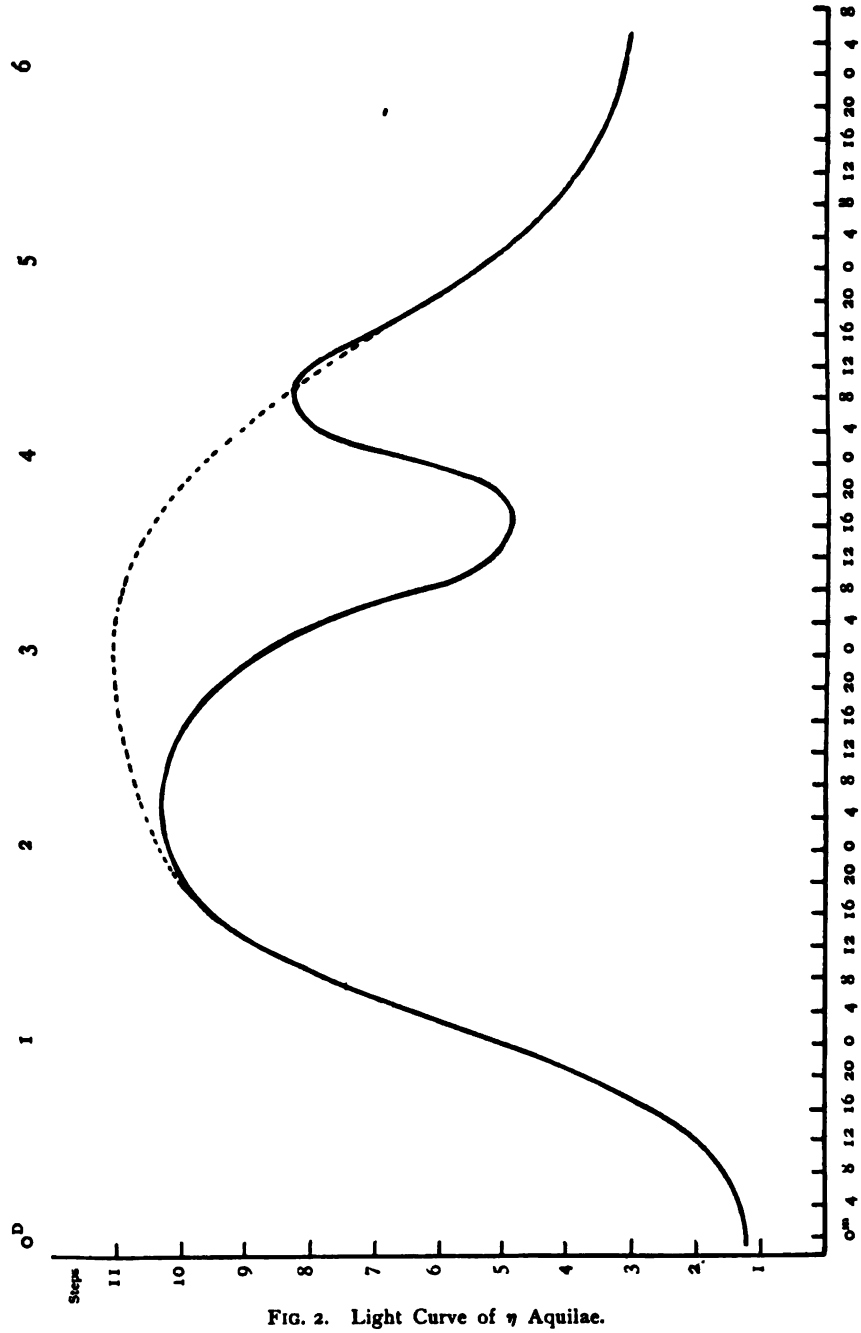

FIG. 2. Light Curve of η Aquilae.

fairly well represented by an eclipse between the periastron and apastron passage.

That is the orbit of Aquilae is very eccentric and inclined 90° to the line of sight. The eccentricity produces the ordinary type of curve indicated by the dotted line in Fig. 2, and the inclination, by causing eclipse, modifies this general type, the next result being the actual observed curve, indicated by the unbroken line.

There are two tests of the accuracy of the theory thus briefly sketched. One of them is crucial, and can be applied at once; the other is no less final, but time, decades indeed, must pass before a definite answer can be obtained. If the increased light of δ Cephei be due to an increase of temperature, consequent on the proximity of the two stars, it is evident that after the companion star passes periastron, and moves rapidly into quadrature, the displacement of *both stars* should be visible in some of the more powerful spectroscopes—that is assuming M. Bélopolsky's values of the angle between the major axis and line of sight, and the time of periastron passage to be correct.

The second test is one which requires time for its application, and apart altogether from its relation to stellar variation, it is an astronomical problem of great interest.

Does such a binary star as α Centauri vary? At periastron the two component stars, each as large as the Sun, one of them many times brighter than the other, are a little over three times nearer than at apastron. The heat which the less luminous body receives in the former position is ten times greater than that which it receives in the latter. Was, therefore, α Centauri brighter in 1875 than it will be in 1915?

I do not think either eye estimates or photometric estimates will yield a satisfactory answer to this question. To answer it with anything like definiteness and certainty, the measures made at any one time ought to be directly comparable with those taken at another time. Now photography permits of such a comparison, in the case where the disparity between the two component stars is not very great. Photographic images of α_1, α_2 Centauri

have been secured at the Cape Observatory, so well defined, that it is possible to make a very valuable and accurate comparison between the size of their disks. And these photographs are a permanent record, a record which can be immediately and accurately compared with a similar set taken say forty years hence. Now, if such a comparison be made, and if from an examination of the plates we find that the relation between the disks is still the same, 1 : 3 or 1 : 4, as the case may be, then eccentricity has no effect upon magnitude. My own expectation, unwarranted by any definite data, and based on an unproved hypothesis, is that there will be change in the relative sizes of the two disks.

On the relation of short period variation to that of long period, I do not enter; that there is a close relation is certain, and if it can be demonstrated that this class of variation is in whole or in part due to orbital movement, then by thus unifying two distinct divisions of stellar astronomy, variable and double stars, an advance of no ordinary importance will be made in our knowledge of sidereal physics.

LOVEDALE, S. AFRICA,
August 22, 1895.

PHOTOMETRY OF A LUNAR ECLIPSE.

By FRANK W. VERY.

IN order to determine the brightness of the Moon during the total eclipse of September 3, 1895, I used a special photometer designed for the comparison of equal angular areas of two luminous bodies, and permitting the measurement of a wide range of luminosity. The instrument, constructed by Brashear from the author's drawing, consists of an opaque blackened metal diaphragm limiting the field of view of a telescope to a small rectangular aperature divided into halves by a total-reflecting prism, and viewed by a positive eyepiece. The total-reflecting prism is placed behind the diaphragm, that is, on the side toward the objective, and receives light from a comparison-flame through a side tube carrying the apparatus for diminishing the lamp-light. The reduction of the standard light is effected by interposing a series of tinted glasses, carried by a bar which can be pointed in any direction, and clamped when the light of the lamp-flame, seen through a 1^{cm} circular aperture, is central, and the pencil of rays directed parallel with the axis of the bar. A small mirror, silvered on the rear face, and situated at the mouth of the side tube of the telescope at its junction with the swiveling-bar, is then inclined until the light is directed centrally upon the small total-reflecting prism already mentioned, when there are seen, at the center of the field of view, two small luminous patches, each $2^{mm}.5$ square, in juxtaposition, one from the Moon or other luminous body seen through the telescope, the other from the variously diminished lamp-flame. The tinted glasses are carried by brass holders rotating about a cylindrical axis, and, when interposed, rest upon the bar which carries tne 1^{cm} circular aperture. There are four pieces of light-blue cobalt glass, "bl.," four pieces of light neutral tinted glass, "ln.," and four of dark neutral tinted glass, "dn.," besides a bundle of a dozen or more pieces of clear, slightly greenish glass, "cl."

The lunar image was formed by a simple lens of $11^{cm}.9$ aperture, and 755^{cm}. focal length, used as a horizontal telescope with the siderostat.

The comparison-light was from a student-lamp, burning a variety of rectified petroleum known as "Elaine," with the flame (about 6^{cm} high) limited by an aperture $1^{cm}.5$ high, so that only the brighest part could be seen.

In determining the absorption of light by the standard glasses, a second student-lamp with nicol-prism polarizer and analyzer, the latter provided with a circle divided to half-degrees, was used in place of the lunar telescope. The comparison-flame with the polarizing apparatus was placed nearer than the other flame in order that the analyzer might be in its most sensitive position, it being difficult to match lights accurately when the principal sections of polarizer and analyzer are less than 45° apart.

The four dark neutral tinted glasses were of the same lot and agreed almost perfectly in their absorption. The same was true for the blue glass, and for all but one of the light neutral tinted glasses. In preparing an apparatus of this sort, a sufficient number of duplicate glasses should be provided, as it is almost impossible to match any that may become broken subsequently. The square of the cosine of the angle between the principal sections of the crossed nicols measures the light, and is given for the principal components of the absorbing train.

Light of undiminished flame	Light through 1st dn.	Light through 2d dn.	Light through 3d ln.	Light through 4th ln.	Light through aberrant 2d ln.	Light through 1 bl.	Light through 10 cl.	Light of undiminished flame
.4494	.0326	.0218	.0996	.0986	.0418	.2871	.1564	.4046
.4564	.0245	.0284	.0924	.0741	.0384	.2350	.1602	.4028
.4408	.0218	.0320	.0826	.0760	.0358	.2470	.1308	.4184
.3875	.0239	.0250	.0945	.0778	.0284	.1963	.1590	.4477
.4512	.0245	.0245	.0807	.1018	.0295	.2887	.1427	.4132
.5139	.0377	.0380	.0610	.0826	.0351	.2365	.1502	.4685
.3555	.0345	.0314	.1028	.0855	.0499	.2218	.1215	.3926
.3405	.0224	.0377	.0679	.0945	.0398	.2545	.1590	.4063
.5297	.0320	.0284	.1114	.1028	.0483	.2545	.1440	.4390
.4200	.0320	.0290	.0845	.0855	.0432	.2380	.1181	.4339
.4345	.0286	.0296	.0877	.0879	.0390	.2459	.1442	.4227

Taking the mean of the readings for the undiminished flame as 0.429, the transmission of light by the standard glasses is:

Dark neutral tint, 1st specimen,	6.67%
" " " 2d "	6.90
Mean,	6.79% = "*dn.*"
Light neutral tint, 1st specimen,	20.44%
" " " 2d "	20.49
Mean,	20.47% = "*ln.*"

Aberrant light neutral tint (No. 2), 9.09 per cent. = "ln_2"
Light blue cobalt glass, 57.32 per cent. = "*bl*"
Clear (greenish) glass — 10 pieces, 33.61 per cent. = 10 "*cl.*"

As shown by Prof. E. C. Pickering's "Application of Fresnel's Formula" (*Proc. Am. Acad. of Arts and Sci.*, 9, October, 1873), the transmission of a single plate should be $t=83.5$ per cent the transmission by ten plates being 33.6 per cent. if the loss were entirely due to reflection, the formula being

$$t=\frac{1-r}{1+(m-1)r},$$

where t is the transmission, r the reflection from one surface, and m the number of surfaces. But the usual loss by reflection from colorless glass is nearer 8.8 per cent. for one plate, and 49.4 per cent for ten plates, giving $t_{10}=.506$. The observed transmission being $t_{10}=.336$, the loss by absorption in the substance of the clear greenish glass must have been $(.506-.336)\div.506=.336$, and the corresponding transmission, $t_{10}=0.664$, for which the exponential law, $t_n^{\,x}=t_x^{\,n}$ (t_x and t_n being transmissions by one and by n plates respectively) ought to hold rigidly, giving 4.0 per cent. as the true absorption of a single plate.

Treating the losses separately, we have then:

Loss by absorbtion - -	= 4.0 %	for one plate.
" " reflection -	= 8.8 "	" " "
Total loss - - -	= 12.8 "	" " "
Resulting transmission	= 87.2 "	" " " " "*cl*"

The assumption that the loss of light is entirely due to reflection would make $t_1 = 83.5$ per cent., and the assumption that the entire loss is absorptive gives $t_1 = 89.7$ per cent. The latter differs so little from what is probably the correct result, $t_1 = 87.2$ per cent., that it may be adopted in the present instance, where great accuracy is not needed. The loss of light in the passage through the dark glasses is due almost wholly to absorption. Accordingly we have the following logarithmic factors which, by addition, give the logarithm of the transmission for any combination of glasses:

1 *cl*	9.9526	1 *bl*	9.7583	1 *dn*	8.8319
2 *cl*	9.9053	2 *bl*	9.5166	2 *dn*	7.6637
3 *cl*	9.8579	3 *bl*	9.2749	3 *dn*	6.4956
4 *cl*	9.8106			4 *dn*	5.3275
5 *cl*	9.7632	1 *ln*	9.3111		
6 *cl*	9.7159	2 *ln*	8.6223		
7 *cl*	9.6685	3 *ln*	7.9334		
8 *cl*	9.6212				
9 *cl*	9.5738	ln_2	8.9586		
10 *cl*	9.5265				

JOURNAL OF OBSERVATIONS.

September 2, 1895, one day before the eclipse.

(1) 3 bl. in path of lamp rays. Lamp a little too bright, a little too blue. 2 bl. not blue enough.

(2) 3 bl.+ 1 ln. too dark. (1) and (2) in faintly purplish *maria*.

(3) 3 bl. lamplight reduced to the right intensity but hardly blue enough to match the brightest streaks. In lucid region south of center of lunar disk. Sky somewhat smoky.

September 3, 1895. J. H. watches for clouds.

(4) In lucid region S. of center. 3 bl.+ 1 ln. a fair match, but dense clouds of smoke over the Moon.

(5) Same region. Smoke has passed away. 3 bl. an exact match.

(6) Same region. 3 bl.+ 10 cl. too dark and too green.

(7) In Oceanus Procellarum 3 bl.+9 cl. equal intensity, too green.

(8) Same. 3 bl.+ 6 cl. a little too bright.

(9) Same. 3 bl.+11 cl. a little too dark. A pretty good sky.

(10) Another part of Oceanus Procellarum 3 bl. + 6 cl. equal.

(11) Another part of same near the E. limb, 2 bl. + 1 ln. intensity nearly right, too yellow.

(12) 3 bl. + 1 ln., too dark.

(13) 3 bl. + 5 cl. a fair match. $9^h\ 48^m$ Eastern M.T., Almanac time of entrance on penumbra.

(14) Bright S. limb, entirely outside of penumbra, 2 bl. + 4 cl. intensity equal, a little too yellow.

(15) In Oceanus Procellarum not quite halfway through calculated penumbra, 3 bl. + 9 cl. equal. Occasional fracto-cumulus clouds, soon passing away. Sky between clouds quite clear. Distant lightning, S.W.

(16) Dark N.E. limb, near Harding, immersed in penumbra to about 0.7 of its calculated width. 3 bl. + 1 ln. a good match.

(17) Same. 3 bl. + 1 ln. not dark enough. The penumbra has darkened appreciably after an interval of two minutes.

(18) Same 3 min. later. 3 bl. + 1 ln. + 5 cl. a fair match.

(19) Dark limb N. 50° E., near Lavoisier, immersed in penumbra to about 0.9 of its calculated width. 3 bl. + 1 ln. + 5 cl. a fair match, a little too blue.

(20) Same, five minutes later. 2 bl. + 1 ln. + $\ln_2$. a little too dark.

(21) Same, two minutes later. Same glasses a little too bright and too yellow. First contact of shadow at 11^h Eastern M.T.

(22) Same region on the edge of the shadow. 2 bl. + 2 ln. + $\ln_2$. a match.

(23) Same region in shadow. 3 bl. + 3 ln. + $\ln_2$. a little too dark.

(24) Same. 3 bl. + 2 ln. + $\ln_2$. too bright.

(25) Same. 2 bl. + 3 ln. + $\ln_2$. right intensity, too yellow.

(26) Same. 3 bl. + 3 ln. + $\ln_2$. a trifle too bright.

(27) In Oceanus Procellarum a little E. of center. 3 bl. +3 dn. a good match.

(28) Same, but progressively deeper in shadow. 3 bl. + 1 ln. + 3 dn. a good match.

(29) Same, thirteen minutes later. Same glasses a good match. Commencement of totality at $12^h\ 6^m$ Eastern M.T. Appearance of Moon seen through a small telescope, reddish purple, with blue-gray border on the side where the light is disappearing. To the naked eye, the Moon has

more of a coppery tinge, the limb which has just passed into shadow brighter, and blue, like a bright line. From a recollection of previous eclipses, this was fancied to be darker than the average. The present measures, however, may be trusted to give a more reliable estimate than such impressions. Some time was lost at this point in detecting the source of some excessively faint stray light which entered the apparatus.

(30) At the center of the lunar image, just before mid-eclipse 3 bl. + 3 ln. $+\ln_s$. + 4 dn., the entire series of darkening glasses, not quite dark enough.

(31) Same region, thirty-five minutes later. The Moon having brightened a little, the same glasses are a fair match.

(32) Same region, twelve minutes later. Same glasses match.

(33) East limb, decidedly brighter as the end of totality approaches. 3 bl. + 3 dn. equal. Totality over at $13^h\ 47^m.5$ Eastern M.T.

(34) East of center, still in shadow. 3 bl. + 3 dn. a match.

(35) In shadow near edge of luminous segment. 3 bl. + 2 dn. too bright.

(36) Same. 3 bl. + 1 ln. + 2 dn. too dark.

(37) In penumbra, just outside of shadow. 3 bl. + 1 dn. too bright.

(38) Same, 3 bl. + 1 ln. + 1 dn. too dark.

(39) Bright N.E. limb, extreme edge of lucid region, and immersed about 0.65 of the calculated penumbral width. 3 bl. + 3 cl. intensity equal.

(40) Same, immersed to 0.45 of the calculated penumbral width. 3 bl. + 2 cl. a match. The illuminated limb looks white with the slightest roseate tint. By contrast the lamp-flame, through three light-blue glasses, looks clear white, but yellow through only 2 bl. and much too bright. At this point thin cirrus clouds formed about the Moon, preventing further measures.

In the 6th column of the following table containing the reductions of the light to zenith and full Moon, $>>$ denotes that the reduced comparison-lamp-light is notably too bright, $>$ that it is a little too bright, $=$ signifies a good match, $<$ a little too faint, $<<$ notably too faint. Seidel's table for atmospheric absorption of light has been used in reducing to zenith.

Eastern M T.	Appt. Zen. D.	Relative Air Mass	Light in Terms of Std.	Character of Match	Estimated exact match	Light reduced to zenith	L. in Terms of Zenithal Full Moon	Radial Position in Shadow	No.
Sept. 2			$1.883(10)^{-1}$	*>					1
$12^h\ 20^m$	55° 05′	1,762	$3.855(10)^{-0}$	<<	$1.3(10)^{-1}$	$1.52(10)^{-1}$	$5.85(10)^{-1}$	Dark region	2
Sept. 3			$1.883(10)^{-1}$	=	$1.9(10)^{-1}$	$2.22(10)^{-1}$	$8.54(10)^{-1}$	Lucid region S. of center	3
$9^h\ 15^m$	64 28	2.319	$3.855(10)^{-0}$	=(†)	Rej.				4
9 20	63 36	2.250	$1.883(10)^{-1}$	=	$1.9(10)^{-1}$	$2.54(10)^{-1}$	$9.77(10)^{-1}$	" " " "	5
			$6.330(10)^{-0}$	<<					6
									7
9 30	62 05	2.136	$7.058(10)^{-0}$	=					8
			$9.790(10)^{-0}$	>	$7.4(10)^{-0}$	$9.59(10)^{-0}$	$3.69(10)^{-1}$	Dark reg. Oceanus Proc.	
			$5.676(10)^{-0}$	<					9
9 39	60 49	2.051	$9.790(10)^{-0}$	=	$9.8(10)^{-0}$	$1.24(10)^{-1}$	$4.77(10)^{-1}$	" " " "	10
			$6.725(10)^{-0}$	=					11
9 44	60 05	2.005	$3.855(10)^{-0}$	<<	$8.8(10)^{-0}$	$1.10(10)^{-1}$	$4.23(10)^{-1}$	" " " "	12
9 46			$1.092(10)^{-1}$	=					13
10 30	54 51	1.732	$2.124(10)^{-1}$	=	$2.1(10)^{-1}$	$2.45(10)^{-1}$	$9.42(10)^{-1}$	Bright S. limb beyond pen.	14
10 35	54 22	1.716	$7.058(10)^{-0}$	=	$7.1(10)^{-0}$	$8.22(10)^{-0}$	$3.16(10)^{-1}$	½ through penumbra	15
10 40	53 54	1.697	$3.855(10)^{-0}$	=	$3.9(10)^{-0}$	$4.49(10)^{-0}$	$1.73(10)^{-1}$	.30 pen. beyond shadow	16
10 42			$3.855(10)^{-0}$	>>				(15) to (26) in dark regions	17
10 45			$2.235(10)^{-0}$	=	$2.2(10)^{-0}$			.25 pen. beyond shadow	18
10 50	52 59	1.661	$2.235(10)^{-0}$	=	$2.2(10)^{-0}$	$.51(10)^{-3}$	$9.65(10)^{-0}$		19
10 55			$6.089(10)^{-3}$	<	$9.\ (10)^{-3}$	$.0\ (10)^{-3}$	$3.85(10)^{-0}$	.10 pen. beyond shadow	20
10 57			$6.089(10)^{-3}$	>	$3.\ (10)^{-0}$	$3.4\ (10)^{-5}$	$1.31(10)^{-0}$		21
11 00	52 06	1.628	$1.252(10)^{-3}$	=	$1.3(10)^{-4}$	$.47(10)^{-4}$	$5.65(10)^{-3}$	Edge of shadow	22
11 10	51 17	1.599	$1.469(10)^{-4}$	<	$3.4(10)^{-4}$	$.82(10)^{-3}$	$1.47(10)^{-3}$	Shadow at .95 rad.	23
11 15			$7.175(10)^{-4}$	>>					24
11 20	50 36	1.576	$2.562(10)^{-4}$	=	$2.6(10)^{-4}$	$2.90(10)^{-4}$	$1.12(10)^{-3}$	" " .85 "	25
11 35	49 48	1.550	$1.469(10)^{-4}$	>	$1.\ (10)^{-5}$	$2.11(10)^{-4}$	$4.27(10)^{-4}$	" " .80 "	26
11 50	49 12	1.530	$5.895(10)^{-5}$	=	$5.9(10)^{-5}$	$6.50(10)^{-5}$	$2.50(10)^{-4}$	" " .74 "	27
11 52	49 11	1.529	$1.207(10)^{-5}$	=	$1.2(10)^{-5}$	$1.32(10)^{-5}$	$5.08(10)^{-5}$		28
12 05	48 54	1.521	$1.207(10)^{-5}$	=	$1.2(10)^{-3}$	$1.32(10)^{-5}$	$5.08(10)^{-5}$	" " .58 "	29
12 50	49 11	1.529	$3.122(10)^{-9}$	>>	$1.\ (10)^{-9}$	$1.10(10)^{-9}$	$4.2\ (10)^{-9}$	" " .21 "	30
13 25	51 12	1.596	$3.122(10)^{-9}$	=	$3.\ (10)^{-9}$	$3.36(10)^{-9}$	$1.29(10)^{-8}$	" " .37 "	31
13 37	52 11	1.631	$3.122(10)^{-9}$	=	$3.\ (10)^{-9}$	$3.40(10)^{-9}$	$1.31(10)^{-8}$	" " .49 "	32
13 38	52 16	1.635	$5.895(10)^{-5}$	=	$5.9(10)^{-5}$	$6.68(10)^{-5}$	$2.57(10)^{-4}$	" " .81 "	33
14 05	54 45	1.733	$5.895(10)^{-5}$	=	$5.9(10)^{-5}$	$6.87(10)^{-5}$	$2.64(10)^{-4}$	" " .83 "	34
14 12	55 24	1.762	$8.682(10)^{-4}$	>>	$5.2(10)^{-4}$	$6.10(10)^{-4}$	$2.35(10)^{-3}$	" " .92 "	35
			$1.777(10)^{-4}$	<<					36
14 15	55 44	1.777	$1.279(10)^{-2}$	>>	$7.7(10)^{-3}$	$9.06(10)^{-3}$	$3.48(10)^{-0}$	.10 pen. beyond shadow	37
			$2.618(10)^{-3}$	<<					38
14 18	56 00	1.789	$1.358(10)^{-1}$	=	$1.4(10)^{-1}$	$1.65(10)^{-1}$	$6.35(10)^{-1}$	.35 " " "	39
14 24	56 38	1.818	$1.514(10)^{-1}$	=	$1.5(10)^{-1}$	$1.78(10)^{-1}$	$6.85(10)^{-1}$	.55 " " "	40
								(39) and (40) in lucid reg'n	

*Lamp. †Smoky.

In this table Nos. 4 and 5 show a variation of light in the proportion of 1 to 5 owing to smoke clouds. Fortunately this did not occur again during these measures. Before the eclipse began, photometric measures of fair samples of dark and bright lunar regions showed the lucid regions (0.977 of full Moon light) to be more than twice as bright as the darker parts of the

maria (0.423 of the lucid full Moon). Nearly the same ratio is maintained in such comparisons as Nos. 15 and 40, the former, 0.316 of full uneclipsed Moon light, being in a dark region half covered by the penumbra, the latter, 0.685 of full Moon light, in a lucid region similarly obscured.

The light diminished rather uniformly during the passage of the penumbra, being gradually reduced to about 0.5 per cent. at the edge of the true shadow, but fell off at a more rapid rate in the outer part of the shadow, becoming at 0.6 of the shadow-radius scarcely more than 1 per cent. of the previous remnant at the margin of the shadow, while of the feeble light at 0.6 of the shadow-radius less than 0.5 per cent. remained at 0.4 radius, which seem to be the limit of a more uniformly illuminated area.

The following concise tabular view illustrates the nature of the change better than a curve:

Position of Point Measured Relatively to Eclipsed Area.	Fraction of Full Moon Light Remaining.
½ hour before beginning of eclipse.....	.977
Beyond outer margin of penumbra.....	.942
.50 width of penumbra beyond shadow....	.316
.30 " " " "	.173
.15 " " " "	.096 5
.10 " " " "	.038 5
.08 " " " "	.013 1
Edge of Shadow.....	.005 65
.95 of radius from center of shadow.....	.001 47
.85 " " " "	.001 12
.80 " " " "	.000 427
.74 " " " "	.000 250
.58 " " " "	.000 050 8
.21 " " " "	.000 000 004 2
.37 " " " "	.000 000 012 9
.49 " " " "	.000 000 013 1
.81 " " " "	.000 257
.83 " " " "	.000 264
.92 " " " "	.002 35
.10 width of penumbra beyond shadow....	.034 8
.55 " " " "	.635
.55 " " " "	.685

At mid-eclipse the center of the lunar disk was so situated that the true position of the Sun's limb must have been 31′ from

the nearest limb of the Earth; but atmospheric refraction being twice 35′ for rays which graze the Earth's surface, the atmospheric annulus still continues to transmit and refract into the shadow a portion of sunlight which may be roughly estimated as follows:

The Sun's undiminished light being taken as unity, its light, after transmission by one atmosphere of such quality as would be considered clear in Pittsburg, is diminished to about 0.6, and after passing the thickness equivalent to two atmospheres, 0.36 remain. This last being for an altitude of 30°, I compared with it the light of the Sun when at an altitude of 37′ (relative air-mass=24.4, the zenithal air-mass being unity). The Sun was of a bright red color, but the tint was not so intense a red as on some occasions of very smoky or hazy sky.

The result showed an intensity of

.0000250 at λ=0.$^{\mu}$610 in the orange of the spectrum,
.0000065 at λ=0.$^{\mu}$520 in the green of the spectrum,

relatively to the same light at altitude. 30°, or allowing this to have a value of 0.36, and comparing with unabsorbed sunlight:

Sunset light of λ=0.$^{\mu}$610 had an intensity=0.0000090,
Sunset light of λ=0.$^{\mu}$520 had an intensity=0.0000023.

A mean sunset light from the entire terrestrial atmospheric annulus, presented at right angles to the Sun's direction, comes from winter as well as summer skies, and will not be as red as the richest tropical sunsets. A mean for the orange and green rays, or 0.00000565, may be taken as the ratio of mean sunset light to undiminished sunlight, although I am aware that there may be wide variations in the numerical value of this quantity. For a vertical passage through air of similar quality, this corresponds approximately to a transmission of

$$(0.00000565)^{\frac{1}{24.4}}=0.609$$

While the rays refracted to the Moon through mid-width of the atmospheric annulus must traverse a longer path through the air than the observed sunset rays in about the proportion 1.4 to 1.0. allowance must also be made for the greater transmissibil-

ity of the upper air. Thus assuming the transmission to be 0.7, instead of 0.6, for unit depth, about four times as much light should reach the Moon as that which comes to the Earth's surface at sunset, according to the observation already given. On the other hand, any cloud or mist in the lower air must largely diminish the transmitted light. The greater transparency of the upper air evidently tends, in some unknown degree, to compensate for the greater length of the path.

However complex the law of refraction by the Earth's atmosphere may be, the effect of the combined refractions by the atmospheric layers in illuminating the Moon during a total eclipse may be duplicated by that of an equivalent homogeneous annular prism. The refraction, however, is strictly not that of a single fixed prismatic annulus, but rays from different parts of the Sun are refracted by differently placed annuli, of similar refracting section, in such a way as to reach all parts of the shadow; and on account of the angular area of the Sun, the red light which has passed through the deeper layers of air is not confined to a particular zone in the shadow as it would be if the luminous source were a point.

The width of the atmospheric annulus which becomes visible by its refraction of the Sun's light, can never equal the entire depth of the Earth's atmosphere. Within the shadow, near to one edge, light is received which has been slightly refracted through thin upper air at the corresponding limb of the Earth; but light also reaches this point by refraction through the denser air of lower layers at the opposite limb. No light which has been refracted by the denser air can reach the corresponding edge of the shadow, but such light must be bent in to the center or to the opposite edge of the shadow.

As shown subsequently, it is improbable that any light can be refracted to the center of the shadow by air at an altitude much over three miles, but the precise altitude will vary according to the dimensions of the shadow-section. Mr. Proctor, in his *Old and New Astronomy*, p. 506, took 2.5 miles for "the depth of atmosphere which is effective in refracting the Sun's light," but

this appears to be a mean value. In the present case the illumination at the center of the shadow could hardly have been greater than that from an annulus of three miles wide, surrounding the Earth, and of intrinsic brilliancy somewhat similar to that of the setting Sun, which, as we have seen, on a particular but fairly typical occasion, had the value 0.00000565 of unabsorbed sunlight. The angular area of this bright ring as seen from the Moon, compared with the angular area of the Sun's disk, must have been:

$$\frac{\left(r+\frac{3r}{3963.3}\right)^2-r^2}{R^2}=\frac{(3240.85)^2-(3238.4)^2}{(952)^2}=\frac{1}{57}$$

Hence the light at the center of the shadow illuminating the eclipsed Moon should have been about $0.00000565\times\frac{1}{57}=0.000000099$ of full moon light if the above assumptions had been fulfilled. The light observed at mid-eclipse was actually about one twenty-fifth of this, confirming the impression that the darkness was greater than usual.

Observation also indicates a notable falling off in the refracted light at about one-half the radius of the shadow, in regard to which it must be remembered that the numbers obtained before and after totality are too large, as the light diffusively reflected from the illuminated segment by the intervening atmosphere, and included in the measurement, forms a considerable, and, for the parts more deeply in shadow, probably the larger proportion of the observed light. The blue gray margin within the shadow near the illuminated segment, no doubt owes its color partly to diffused sky light, although the persistence of this brighter margin for some time after totality has begun, shows that it must be partly due to the greater blueness of the light refracted by the upper air, which has suffered a smaller selective absorption of the shorter waves, and contributes very appreciably to the illumination of the outer part of the shadow. The sudden diminution of light between observations 29 and 33, which were made during totality, is explained by the vanishing of the diffused sky light, at least in part. Theory, however, shows that only the lowest,

PRELIMINARY TABLE OF SOLAR SPECTRUM WAVE-LENGTHS. IX.

By HENRY A. ROWLAND.

Wave-length	Substance	Intensity and Character	Wave-length	Substance	Intensity and Character
5429.349		00	5438.507		000
5429.495		0000	5438.674		0000
5429.637		000	5438.917		0000
5429.717		1	5439.256		0000
5429.911	Fe	6 d?	5439.506		0000
5430.062		0	5439.676		0000
5430.295		0000 N	5439.914	A	000
5430.572		00	5440.130		000
5430.993		0000	5440.707		0000
5431.266		0000	5440.861		000
5431.590		0000	5441.031		0000
5431.747	A?	000.	5441.188		000
5432.061		0000	5441.350		000
5432.564		000	5441.549	Fe?	1
5432.753	Mn[1]	1 N d?	5442.155		0000
5432.951		0000	5442.499	A?	0000
5433.160	Fe	2	5442.628	Cr	00
5433.406		000 N d?	5442.971		0000 N
5433.614		00 N	5443.179		000
5433.844		00 N	5443.405		0000
5434.384		0000 N	5443.629		000
5434.740 s	Fe	5	5443.825		000
5435.069		0000	5444.108		0000
5435.246		000	5444.300		0000
5435.388		00	5444.796	Co	00
5435.790		0000	5444.933		0000
5435.906		0000	5445.080		0000
5436.071	Ni	2	5445.259	Fe	4
5436.265		0000	5445.621		0000
5436.341		0000	5445.710		0000
5436.508	Fe	1	5446.436		0000
5436.650		0000	5446.577		0000
5436.802	Fe	1	5446.797	Ti	2
5436.938		000	5447.130 s	Fe	6 d?
5437.300	Ni?	000	5447.454		0000
5437.413		00	5447.737		000
5437.591		0000	5447.889		0000
5437.766		0000	5448.142		0000
5437.996		0000	5448.304	A?	0000
5438.259		000	5448.582		00

[1] Compound lines in both Mn and Sun.

*A means "atmospheric line."

Wave-length	Substance	Intensity and Character	Wave-length	Substance	Intensity and Character
5448.882		0000	5462.988		0000
5449.138		000	5463.174 s	Fe	3
5449.369		000	5463.318		0000
5449.913		0000	5463.494 s	Fe	3
5451.005	Sr	00	5463.686		0000
5451.132		0000	5463.841		0000
5451.330		000	5464.037		0000
5452.160		0000	5464.179	Cr	000
5452.309		00	5464.314		0000 N
5452.504		000	5464.490	Fe	0
5452.817		0000	5464.678		0000 N
5453.056		00 N	5465.351	A?	000 N
5453.293		0000	5465.584		0000
5453.444		00	5466.237		0000 N
5453.860		000	5466.409		0000
5454.064		000	5466.609 s	Fe	3
5454.199		00	5466.793		0000
5454.326		000	5466.970		0000
5454.569		0000	5467.198	Fe	1
5454.783	Co	00	5467.355		0000
5454.998		0000	5467.482		0000
5455.297		0000	5467.605		000
5455.671 s	Fe?	2	5467.773		0000
5455.834 s	Fe	4	5467.989		000
5456.117		0000 N	5468.149		0000
5456.319		0000 N	5468.320		00
5456.571	A?	000	5468.601		000 Nd?
5456.734		000 N	5468.843		000
5457.088		0000	5469.000		0000
5457.311		000	5469.278		0000
5457.453		0000	5469.485		00 N
5457.640	Mn	{ 000	5469.972		0000
5457.701		{ 000	5470.298		00
5458.034		0000 N	5470.432	A?	0000
5459.072		0000	5470.650		000
5459.406	A?	000	5470.802	Mn	{ 0
5459.593		0000	5470.883		{ 0
5460.266		0000 N	5471.055		0000
5460.572		000	5471.414	Ti	000
5460.721		00	5471.601		0000
5460.904		0000 N d?	5472.128		0000 N
5461.088		00	5472.503		000
5461.349		0000 N	5472.685		0000Nd?
5461.602		0000 N	5472.916	Fe	1
5461.762		0	5473.135		0000
5462.027		000 N	5473.211		0000
5462.269	A?	0000 N	5473.373		00
5462.478		0000	5473.594		000
5462.705 s	Ni	1	5473.758		000 N
5462.866		0000	5473.950		0000

Wave-length	Substance	Intensity and Character	Wave-length	Substance	Intensity and Character
5474.113	Fe	3	5484.517		0000
5474.299		0000	5484.846		000
5474.436	Ti?	00	5485.023		0000
5474.668		000	5485.266		0000
5474.962		0000 N	5485.580		0000
5475.286		0000 N	5485.757		000
5475.645		000 N	5485.915		0000
5475.938		0000 N	5486.016		000
5476.217		0000 N	5486.320		000
5476.387		00	5486.730		000
5476.500	Fe	1	5486.968		000
5476.778	Fe	3	5487.170		000 N
5476.946		0000	5487.354	Fe	1
5477.123 s	Ni	5	5487.534	V	0000 N
5477.290		0000	5487.724	Ti	00 N
5477.486		0000	5487.959 s	Fe	3
5477.707		000 N d	5488.139		000
5477.901	Ti	00	5488.374		00 Nd?
5477.992		000	5488.547		0000
5478.160		0000	5488.717		0000
5478.360	A?	0000	5489.194		00
5478.578		00	5489.893		000
5478.668	Fe	0	5490.074		00
5478.900		0000	5490.207		0000
5478.991		000	5490.367	Ti	0
5479.234		0000	5490.531		0000
5479.451		0000 N	5490.672		0000
5479.983		0000	5490.905		0
5480.185		000	5491.037		000
5480.408		0000	5491.897		0000
5480.562		0000	5492.049		00
5480.722	Cr	00 N	5492.242		0000
5480.964		000	5492.424		000
5481.071	Fe	1	5492.566		000
5481.273		000 N	5493.095		00
5481.452	Fe	1	5493.274		00c0
5481.652	Fe, Ti	1	5493.450		00
5481.815		0000	5493.558		0000
5481.941		0000	5493.709	Fe	1
5482.078		00	5493.865		0000
5482.200		0000	5494.063		0 d
5482.469		000 N	5494.193		0000
5482.807		000 N	5494.358		0000
5483.131		0000	5494.536		0000
5483.307	Fe	1	5494.679	Fe	0
5483.566	Co	1 d?	5494.912		000
5483.758		0000	5495.096	Ni	00
5483.884		000	5495.916		000
5484.112		000	5496.119		0000
5484.244		000	5496.458		0000

Wave-length	Substance	Intensity and Character	Wave-length	Substance	Intensity and Character
5496.780		00	5507.196		0000
5497.011		000	5507.985		000
5497.192		0000	5508.289		0000 d?
5497.325		000	5508.451		0000
5497.447		0000	5508.625		0
5497.624		0000	5508.840		0
5497.735 s	Fe	5	5509.058		0000
5497.911		0000	5509.321		0000
5498.105		000	5509.756		00
5498.394		0000	5509.938		000 N
5498.566		0000	5510.120	Y	0
5498.955		0000	5510.229	Ni	1
5499.234		000	5510.449		0000
5499.376		0000	5510.586		0000
5499.635		000	5510.829		00
5499.804		00	5510.942		00
5499.976		0000	5511.173		0000
5500.560		0000	5511.375		0000
5500.811		0000	5511.644		000
5500.957		0000	5511.872	Fe	0000
5501.193		000	5512.013		00
5501.461	La	0000 N d?	5512.266		00
5501.683 s	Fe	5	5512.470	Fe	1
5501.919		0000	5512.620		00
5502.088		0000	5512.741	Ti	2
5502.297		00	5512.923		0000
5502.480		0000	5513.025		0000
5502.783		0000	5513.198 s	Ca	4
5502.955		0000	5513.439		0000
5503.153		00	5513.592		0000
5503.286	Fe	1	5513.769		0000
5503.444		00	5513.926		0000
5503.710		00 N	5514.057		0000
5503.927		000 N	5514.189		0000
5504.117	Ti	0	5514.431		0000
5504.310		00	5514.563	Ti	2
5504.431		0000	5514.753	Ti	2
5504.599		00	5514.902		0000
5504.867		0000	5515.006		000
5505.099		0000	5515.150		0000
5505.489		0000	5515.317		0000
5505.747		0000 N	5515.565		000
5505.939		0000	5515.697		0000
5506.095	Mn	1	5515.857		00
5506.243		0000	5516.051		0000
5506.395		000	5516.253		0000 N
5506.576		000	5516.513		000
5506.719		000	5516.708		000
5506.823		0000	5516.950	Mn	0
5507.000 s	Fe	5	5517.034	Mn	0

Wave-length	Substance	Intensity and Character	Wave-length	Substance	Intensity and Character
5517.286	Fe	0	5527.796		000 d
5517.458		0000	5528.084		0000 N
5517.589		0000	5528.297		000
5517.756		00	5528.641 s	Mg	8
5517.984		0000 N	5529.115		00
5518.307		000	5529.384	Fe	00
5518.378		0000	5529.564		000
5518.576		0000	5530.001		0000
5518.754		0000	5530.178		000 d
5519.001		0000	5530.491		0000
5519.289		0000	5530.704		00 N
5519.633		000	5530.997	Ti	00 N
5519.797	Fe	0	5531.321		0000
5520.069		000 N	5531.913		0000
5520.246		0000	5532.202		00
5520.434		000 N	5532.353		000
5520.727		00 N	5532.571		000 N
5520.920		0000	5532.968		1
5521.160		00 N	5533.092		0
5521.349		00	5533.248		000
5521.511		00	5533.365		0000
5521.646		000	5533.654		000
5521.799		00	5533.791		000
5522.002		0000 N	5534.011		000 d
5522.407		0000 N	5534.504		000
5522.665	Fe	2	5534.620		0000
5522.883		0000 N	5534.895	Fe	000
5523.176		0000 N	5535.061 s	Fe	2
5523.469	Ti	000	5535.277		0000 N
5523.550	Ti	000	5535.399		000 N
5523.783		000 N	5535.644	Fe	2
5523.960		0000	5535.778		0
5524.077		0000	5535.985		0000
5524.209		00	5536.072		0000
5524.482		000	5536.300		000
5524.684		000	5536.492		000
5524.785		0000	5536.679		0000
5525.010		000	5536.811		00
5525.220		000	5537.031		0000
5525.347		00	5537.139		0000
5525.565		0000 N	5537.332		000
5525.765	Fe	2	5537.509		0000
5525.929		000	5537.726		0000 Nd?
5526.066		000 N	5537.928	Mn	00
5526.405		000 N	5538.025	Mn	00
5526.789		000 N	5538.253		0000
5527.033		3	5538.405		0000
5527.208		000	5538.526		0000
5527.325		0000	5538.738	Fe	1
5527.619		0000	5538.925		0000

Wave-length	Substance	Intensity and Character	Wave-length	Substance	Intensity and Character
5539.273		0000	5551.995		0000 N
5539.507	Fe	0	5552.193	Mn	000
5539.745		0000 N d?	5552.452		000
5540.044		000	5552.673		0000Nd?
5540.192		0000	5552.916		00
5540.393		000 N	5553.068		0000
5540.661		000 N	5553.346		000 N
5540.940		000	5553.452		000 N
5541.110		000	5553.619		0000 N
5541.501		0000	5553.804	Fe	1
5541.805		0000	5553.927	Ni	0
5542.361		0000	5554.161		0000
5542.545		0000	5554.459		0000 N
5542.756		0000	5554.748		0000
5542.969		0000	5554.879		0000
5543.112		0000	5555.036		00
5543.262		000	5555.122 s	Fe	3
5543.414 s	Fe	2	5555.395		0000
5543.626		0000	5555.572		0000
5543.975		0000	5555.683		0000
5544.157 s	Fe	2	5555.860		000
5544.386		000	5555.951		0000
5544.560		0000	5556.418		0000 N
5544.831	Y	000	5556.691		0000
5544.983		0000	5556.933		0000 N
5545.266		0000	5557.196		000
5545.487		0000	5557.287		000
5545.643		0000	5557.710		000
5545.913		0000 N d?	5557.946		000 N
5546.147		000 } d	5558.136		0
5546.248		000 }	5558.209	Fe	0
5546.562		0000	5558.391		0000
5546.732	Fe	2	5558.472		0000
5546.956		000	5558.816		0000
5547.215	Fe, V	1	5559.068		000 Nd?
5547.522		0000 N d?	5559.281		000 Nd?
5547.910		0000 N	5559.867		00
5548.161		0000	5560.106		000
5548.413		0000	5560.243		0000
5548.535		0000	5560.434	Fe	2
5548.697		0000	5560.647		0000
5549.546		0000	5560.911		0000
5549.748		0000	5561.234		0000
5549.875		00	5561.464		00
5550.179		00	5561.699		0000 N
5550.873		0000	5561.821		0000 N
5551.110		0000	5562.044		0000 N
5551.241		0000	5562.343		000
5551.524		0000 N	5562.500		0000
5551.767		000 N	5562.717		0000

Wave-length	Substance	Intensity and Character	Wave-length	Substance	Intensity and Character
5562.933	Fe	2	5575.310		0000
5563.144		0000 N	5575.614		0000
5563.506		000 N	5575.766		0000
5563.623		0000	5575.897		0000
5563.824	Fe	3	5576.079		0000
5563.916		0	5576.320 s	Fe	4
5564.352		0000 N	5576.589		0000
5565.191		0000	5577.252		00
5565.700	Ti	00	5577.561		000
5565.931	Fe	3	5577.783		0000
5566.172		0000 N	5578.739		0000
5566.304		00	5578.946	Ni	1
5566.456		0000	5579.260		0000
5566.629		0000	5579.381		0000
5566.780		0000	5579.574		000
5566.947		000	5579.711		0000
5567.035		000	5580.530		0000
5567.205		0000 N	5580.672		000
5567.367		0000 N	5580.879		0000
5567.501		000	5581.273		0000
5567.621	Fe	2	5581.502		0000
5567.802		0000	5581.740		0000
5567.989		000 Nd?	5581.922		0000 N
5568.297		000	5582.198 s	Ca	4
5568.490		0000	5582.367		0000
5568.682		0000	5582.506		000
5568.925		0000	5582.630		0000
5569.088		00	5582.973		0000
5569.249		0000	5583.186		000
5569.370		000	5583.358		0000
5569.542		0000	5583.607		0000 N
5569.848 s	Fe	6	5583.845		000 N
5570.286		000	5584.208		00 N
5570.615		000	5584.532		000
5570.827		000	5584.729		000
5570.982		0000	5584.988	Fe	0
5571.708		0000	5585.260		0000
5572.370		000 N	5585.397		000
5572.572		0000 }	5585.543		0000
5572.669		0000 }	5585.726		0000
5572.871		000	5585.877		000
5573.075	Fe	6	5586.222		0000
5573.328		1	5586.497		000
5573.524		0000	5586.900		000 N
5573.762		0000	5586.991	Fe	7
5573.876		000	5587.355		0000
5573.974		000	5587.588		0000Nd?
5574.616		000	5587.800	Fe	0
5574.834		0000	5587.947		0000
5575.128		000	5588.084	Ni	1

Wave-length	Substance	Intensity and Character	Wave-length	Substance	Intensity and Character
5588.368		000	5602.995 } s	Fe	1
5588.469		0000	5603.083 }	Ca	3
5588.985 s	Ca	6	5603.186 }	Fe	4
5589.227		000	5603.516		0000
5589.429		0000 N	5603.738		0000
5589.582	Ni	0	5603.993		00
5586.794		0000 Nd?	5604.416		0000
5590.079		00	5605.171		000
5590.343 s	Ca	3	5605.560		0000
5590.589		000	5605.864		000
5590.725		0000	5606.122		000
5590.927	Ti	000	5606.268		0000
5591.039	Ti	000	5607.220		000
5591.226		0000	5607.372		0000
5591.586		000	5607.614		000
5592.192		0000	5607.761		0000
5592.375	Ni	0	5607.887		00
5592.487	Fe, Ni	1	5608.059		0000
5592.643		000	5608.393		000
5592.881		000	5608.525		000
5593.458		0000	5608.930		0000 N
5593.680		000	5609.196		00
5593.961	Ni	0	5609.395		0000
5594.196		0000 N	5609.901		0000
5594.383		0000 N	5610.023		000
5594.691 s	Ca	4	5610.205		000
5594.884	Fe	1	5610.467		000
5595.112		0000 N	5610.609		0000
5595.284		000	5611.584		00
5595.704		0000	5611.855		000
5595.906		0000	5612.573		000
5596.129		0000	5612.710		000
5596.402		000	5613.929		000 N
5596.555		0000	5614.253		0000 N
5597.290		000	5614.497		00 N
5597.465		0000	5614.632		0000
5598.524 s	Fe	1	5614.819		0000
5598.711 s	Ca	4	5614.997	Ni	0
5599.034		000	5615.199		0000
5599.170		0000	5615.382		0000
5600.243		00 } d	5615.520 s	Fe	2
5600.318		0000 }	5615.751		0
5600.450	Fe	0	5615.877 s	Fe	6
5600.678		0000	5616.404		000
5601.037		0000	5616.541		0000
5601.505 s	Ca	3	5617.163		0000
5601.654		0000	5617.365		00
5602.042		00 Nd?	5617.451		00
5602.296		000	5617.633		0000
5602.783		000	5617.765		0000

Wave-length	Substance	Intensity and Character	Wave-length	Substance	Intensity and Character
5617.972		0000	5630.091		0000
5618.130		000	5630.313		000
5618.292		0000 N	5630.516		0000
5618.646		000 N	5631.194		0000 N
5618.858	Fe	1	5631.376		0000
5619.060		000 N	5631.720		0000
5619.192		0000 N	5631.913		000 N
5619.455		000	5632.049		000 N
5619.637		0000	5632.232		000
5619.824		0	5632.672		000 Nd?
5620.037		000	5632.971		0000
5620.250		000	5633.441		000 Nd?
5620.452		0000 Nd?	5633.659		0000 N
5620.634		000	5633.866		0000
5620.715	Fe	0	5633.967		0000
5620.862		0000	5634.171 s	Fe	3
5621.438		000 N	5634.446		0000 Nd?
5621.595		000 N	5634.740		0000
5621.833		000	5635.412	C	0000
5622.450		000	5635.559	C	0000
5622.996		000	5635.736	C	0000
5623.179		00	5636.045	Fe	1
5623.857		0000	5636.218		0000
5624.245 s	Fe	1	5636.339		0000
5624.408		0000 N	5636.455		000
5624.575		0000 N	5636.688		000 N
5624.769 s	Fe, V	4	5636.925	Fe	0
5625.096		000	5637.113		0000 Nd?
5625.304		0000 Nd?	5637.339	F?, Ni	1
5625.541	Ni	0	5637.632	Fe	1
5625.755		000	5637.928		000 N
5625.904		00	5638.488	Fe	3
5625.245		000 N	5638.707		0000
5626.468		0000	5638.980		00
5626.812		0000	5639.575		000
5627.034		000	5639.775		0000
5627.313		000	5640.215		0000
5627.475		0000	5640.397		0000
5627.592		0000	5640.538		0
5627.723		000	5640.721		0000
5627.859	V	00	5640.903		0000
5628.087		0000	5641.206		1
5628.239		000 N	5641.353		000
5628.411		0000	5641.510		0000
5628.571	Ni	00	5641.667 s	Fe	2
5628.867	Cr	00	5641.954		0000 d
5629.099		0000	5642.112	Ni	0
5629.261		000	5642.396		0000
5629.453		0000	5642.605		00
5629.924		0000	5642.846		000

Wave-length	Substance	Intensity and Character	Wave-length	Substance	Intensity and Character
5642.978		00	5657.471		0000
5643.302	Ni	0	5657.667		000
5643.503		0000 N	5657.890		0000
5643.817		0000 N	5658.097 s	Y,-	2
5644.159		000	5658.378		0000
5644.257		00	5658.561		0
5644.365	Ti	0	5658.753	Fe	1
5644.566		000	5658.884	Cr	0
5645.254		000 N	5659.052	Fe	4
5645.830 s	Si	1	5659.326		0000
5646.039		00	5659.545		0000
5646.322		000 N	5659.817		0
5646.530		0000 N	5660.001		0000
5646.904		00	5660.133		0000
5647.461	Ti	00	5660.365		0000
5647.664		0000	5660.527		0000
5647.765		0000	5660.739		00
5647.997		0000	5660.892		0
5648.119		0000	5661.022		0
5648.503		000	5661.240		000
5648.796	Ti	00	5661.418		0000
5648.969		0000	5661.570	Fe?	0
5649.131		0000	5661.712		0000
5649.304		00	5661.833		0000
5649.611	Cr	00 N	5662.025		0000
5649.898	Fe-Ni	0 d	5662.200		0000
5650.209	Fe	1	5662.374	Ti	0
5650.420		0000	5662.526		0000
5650.501		0000	5662.744 s	Fe	4
5650.669		0000	5662.967		0000 N
5650.911	Fe	1	5663.155	Ti, Fe, Y	1
5651.099		0000	5663.341		0000
5651.256		0000	5663.735		0000
5651.489		0000	5664.039		0000
5651.691	Fe	0	5664.218	Ni-Cr	1 N
5651.954		0000 N d?	5664.413		0000
5652.239		0000	5664.575		0000
5652.542	Fe	1	5664.797		000
5653.387		0000	5665.557		0000
5653.898		0000	5665.775	Si	1 N
5654.091	Fe	1	5666.131	A?	000
5654.231		0000	5666.899		0
5654.716		00	5666.998		000
5654.991		0000 N	5667.368		0
5655.156		00 N	5667.542		000
5655.395	Fe	1	5667.739	Fe	2
5655.558		0000	5667.997		0000
5655.715 s	Fe	2	5668.300		0000
5655.908		0000	5668.593	V	000
5657.107		0000	5669.130		0000

Minor Contributions and Notes.

NOTE ON PASCHEN'S LAWS OF RADIATION.

In his paper, "On the Existence of Law in the Spectra of Solid Bodies" (this Journal, October, 1895), Dr. Paschen has propounded two principles of radiation, the first concerning the form of a spectral energy-curve near the maximum, the second connecting the position of this maximum with the absolute temperature. The mathematical expressions of these laws are beautifully simple, and, if true, would be exceedingly convenient.

According to the first-principle, the square of the wave-length of the maximum in a normal spectral energy-curve is equal to the product of the wave-lengths of any two points of equal energy on either side of the maximum, provided the ratio of the extreme wave-lengths be not greater than about 1 : 2.

This proposition seems to be approximately true for the spectral energy-curve of a solid body at low temperatures where the maximum has a considerable wave-length, but at high temperatures the normal curve, plotted on the wave-length scale, becomes quite unsymmetrical, and the relation is no longer true. In any case, the determination of the position of the maximum is not susceptible of very great accuracy, since slight errors of observation of the energies near the maximum may displace its position to an extent which, at low temperatures, is comparable with the deviation from the proposed law.

I have tested this law by applying it to a series of measures of the radiation from the crater of the positive carbon of a very powerful arc-light whose infra-red spectrum was observed at the Allegheny Observatory (see the *Am. Jour. Sci.*, 38, 438, December, 1889). Reducing the measures to the normal scale, the following positions are selected from the smoothing curve of interpolation:

Observed maximum		Energy = 1.000	$\lambda_{max.}$		$= 1^{\mu}.16$
$\lambda_1 = 1^{\mu}.00$,	$\lambda_2 = 1^{\mu}.65$	" = .821	"	(computed)	1 .28
$\lambda_1 = 0$ .90,	$\lambda_2 = 2$ .54	" = .503	"	"	1 .51
$\lambda_1 = 0$ .80,	$\lambda_2 = 3$ .51	" = .281	"	"	1 .68

Here the progressive departure of the computed from the observed

position of the maximum energy, as the limits widen, is too great to be neglected. Even larger departures may be obtained from observed solar curves, but these having been altered by atmospheric absorption are not appropriate for demonstration.

Dr. Paschen's second proposition is that the wave-length of the maximum in the normal spectral energy-curve is inversely proportional to the absolute temperature of the radiating body, or that the product

$$\lambda_{max.} \times T = 2700 \text{ (a constant)}.$$

An observed series between the absolute centigrade temperatures 501° and 1282°, showing that the product $\lambda_{max.} \times T$ diminishes at the lower temperatures, is explained by Dr. Paschen as due partly to the fact that the radiating body, iron oxide, is not absolutely black, and radiates less of the longer waves than a black body; the deviation is also partly attributable to the fact that the blackened bolometer does not absorb the long waves as completely as it does the short ones; and in addition to these causes which tend to diminish the assigned wave-length of the maximum at the lower temperatures, it is considered probable that errors in the determination of the shorter wave-lengths, corresponding to the position of the maximum at higher temperatures, have caused the assignment of too large values to the wave-lengths of these maxima.

Nevertheless, in view of the known complexity in the radiation of a solid body, and the various rates of increment with the temperature attaching to different rays, it is improbable that the law connecting the position of the maximum and the temperature should be as simple as this, which predicates constancy in the product $\lambda_{max.} \times T$; and the following determinations, through a wider range of temperature than that employed by Paschen, show that the value of the product $\lambda_{max.} \times T$, for the almost absolutely black substance carbon, increases with the temperature.

Messrs. Wilson and Gray (*Proc. R. S.*, 58, 35, July, 1895) have determined the temperature of the hottest part of the positive pole of the electric arc as 3600° absolute. The wave-length of the maximum radiation from the same is about 1$^{\mu}$.16, as already stated. The product, 4176, is much larger than Paschen's constant.

For the lowest temperature I choose an observation made at the Allegheny Observatory in very cold and dry winter weather, requiring no correction for the atmospheric absorption which is so strongly

exerted at the position of the maximum for bodies at low temperatures. I estimate the wave-length of the maximum, using the values which Paschen has given for a rock-salt prism in the transformation.

For the middle temperature one of Paschen's determinations is selected, taking his highest temperature at which iron oxide behaves more nearly like a black body. We have.

	$\lambda_{max.}$	T	$\lambda_{max.} \times T$
Carbon of electric arc -	1$^{\mu}$.16	3600.°	4176.
Iron oxide - - -	2 .125	1282.	2727.
Lampblack - - -	7 .3	318.	2321.

If these products are plotted with the wave-lengths as abscissæ, it will be seen that the value of $\lambda_{max.} \times T$ can hardly be less than 10,000 for a wave-length of 0$^{\mu}$.5 (corresponding to the maximum in the normal solar spectrum), which would give 20,000.° as the minimum value of the solar temperature.

As will be recognized by all who are familiar with attempts to reach a value far above the limit of actual observation, there is great uncertainty as to whether a law, which apparently holds at lower temperatures, will continue to be followed at higher ones, and the estimate just given is open to the same objection which affects all such work, that it transcends actual knowledge. FRANK W. VERY.

PHOTOGRAPHIC MAPS OF METALLIC SPECTRA.

WE are glad to call attention to the following statement by Professor Henry Crew in regard to photographic maps of metallic spectra which he has prepared for distribution. We have carefully examined the maps, and can testify to their excellence.

NORMAL SPECTRUM OF THE MAGNESIUM ARC.

A map of the arc spectrum of Magnesium has recently been completed for the region lying between λ 2600 and λ 5800. The photographs have been made by use of a Rowland concave grating having a radius of ten feet. All the plates, except one, lie in the second order spectrum. The scale is approximately three Ångström units to the millimeter.

The metallic arc is formed between moving poles after the manner devised by Messrs. Crew and Tatnall, and described in the *Philosophical Magazine*, October, 1894. In this way, the continuous spectrum of the heated poles and the carbon of the customary arc are avoided.

On the upper side of the Magnesium spectrum is photographed a scale of Ångström units; on the lower side, and in immediate juxtaposition, is photographed the spectrum of the Iron arc. On the back of each plate is printed a list of Kayser and Runge's values for the wave-lengths included between the extremities of that plate; so that almost any line in their list can be identified at once. It being impossible to show all the strong lines and all the weak lines on one plate, the preference has been shown to the weaker lines, *i. e.*, the stronger lines are often over-exposed.

Only commercial Magnesium has been used in the preparation of these photographs. As a consequence many impurities make their appearance. But it is believed that this feature will add to the usefulness of the map: for most of these impurities have been identified and are printed, with their wave-lengths, on the back of the mount. Naturally the impurity lines are very weak, and many that appear on the negative cannot be seen on the print.

The prints are on "Lithium paper," and measure eleven inches in length, each thus covering eight hundred Ångström units. Each portion of the spectrum appears on two different plates, since the wave-length of the middle of one plate differs from the wave-length of the middle of the next plate by only four hundred Angström units.

The list of the plates is as follows:

No. of Plate	Region	Remarks
1.	λ 5100. to λ 5900.	Showing λ 5711.374, the longest wave-length given by Kayser and Runge.
2.	λ 4600. to λ 5400.	Showing reversal in Fraunhofer's "b" group, the first triplet in the "*Zweite Nebenserie*" of Kayser and Runge.
3.	λ 4100. to λ 4900.	Showing the line at 4481. which Scheiner suggests may be a criterion of stellar temperature.
4.	λ 3600. to λ 4400.	Showing the only triplet of the "*Erste Nebenserie*" which lies in the visible spectrum.
5.	λ 3200. to λ 3900.	Showing one triplet from each series, thus illustrating the difference in physical character between the two.
6.	λ 2770. to λ 3400.	Showing five triplets and the remarkable reversal of λ 2852.
7.	λ 2400. to λ 3800.	A first order plate intended only for the region between λ 2600, and λ 2800; very unsatisfactory.
8.	λ 4600. to λ 5400.	Showing the Mg band at λ 5007. as seen in the arc.

These silver prints are each mounted on white cardboard, 2½ × 12

inches. This size will be found a very convenient one for use at the eye-end of the spectroscope and for purposes of instruction in general.

The set of eight photographs complete will be sent to any address, postpaid, for three dollars.

All orders should be sent to Business Agent, Northwestern University, Evanston, Ill., U. S. A.

NOTICE.

It is proposed to complete, at a date as early as possible, maps of all the other elements that can be worked by this method.

Maps of *Zinc* and *Aluminum* will be finished and ready for distribution within a few months.

November, 1895.

HARVARD COLLEGE OBSERVATORY, CIRCULAR NO. 1.

INTRODUCTION.

FOR some years the need has been felt at the Harvard College Observatory of some means of making a more prompt announcement of the results of its work. It is proposed therefore to issue a series of circulars, as required, to announce any matters of interest, such as discoveries made here, the results of recent observations, new plans of work, and gifts or bequests. It is not proposed to give these circulars a wide distribution, but rather to use them as a means of bringing new facts to the attention of the editors of astronomical and other periodicals, and thus secure the immediate publication of such portions as would be of interest to the readers of these periodicals. The distribution will be made without charge to such persons as will be likely to use the results. Editors who have published extracts from the circulars and desire their continuance are requested to signify this by sending to this Observatory marked copies of the publications in which the extracts appear.

A NEW STAR IN CARINA.

From an examination of the Draper Memorial photographs taken at the Arequipa Station of the Observatory, Mrs. Fleming has discovered that a new star appeared in the constellation Carina in the spring of 1895. A photograph, B 13027, taken on April 14, 1895, with an exposure of 60 minutes, shows a peculiar spectrum in which the hydrogen lines $H\beta$, $H\gamma$, $H\delta$, $H\epsilon$, $H\zeta$, are bright, and the last four of

these are accompanied by dark lines of slightly shorter wave-length. A conspicuous dark line also appears about midway between $H\gamma$ and $H\delta$. A comparison of the spectrum of this star with that of Nova Aurigae and Nova Normae shows that all three closely resemble each other and are apparently identical in their essential features. Another photograph taken on June 15 with an exposure of 60 minutes shows a change in the spectrum of this object. The hydrogen lines $H\beta$, $H\gamma$, and $H\delta$, are still bright although the continuous spectrum is very faint. Another line whose wave-length is about 4700 is here as bright as the hydrogen lines. On the photograph taken on April 14 it is barely visible.

An examination was next made of all the photographs of the region containing this star. On sixty-two plates, the first taken on May 17, 1889, and the last on March 5, 1895, no trace of the star is visible, although on some of them stars as faint as the fourteenth magnitude are clearly seen. The exposures of these plates varied from 10 to 242 minutes. On nine plates, the first taken on April 8 and the last on July 1, 1895, the star appears and its photographic brightness diminishes during that time from the eighth to the eleventh magnitude. This star precedes *A. G. C.* 15269 (photometric magnitude 5.47) $0^m.5$, and is $0'.7$ north. Its approximate position for 1900 is therefore in R. A. $11^h\,3^m.9$; Dec.—$61°\ 24'$. Two stars of the eleventh magnitude are near the Nova. One is nearly north, $110''$ distant, the other is $80''$ south preceding.

EDWARD C. PICKERING.

October 30, 1896.

HARVARD COLLEGE OBSERVATORY, CIRCULAR NO. 2.

VARIABLE STAR CLUSTERS.

PROFESSOR SOLON I. BAILEY, in charge of the station at Arequipa, maintained by this Observatory, has discovered from an examination of the photographs obtained by him of certain globular clusters that they contain an extraordinary number of variable stars. This is not a general condition of stellar clusters, however, for in others similarly examined by Professor Bailey no variable stars have been found. The photographs used in this discussion were taken at Arequipa with the 13-inch Boyden Telescope. In the cluster in Canes Venatici, Messier 3 (*N. G. C.* 5272), no less than eighty-seven stars have been proved to be variable from an examination of fifteen photographic plates. The

change in every case is certain, and has been confirmed independently by Mrs. Fleming and the writer from an examination of six of these plates. Sometimes the variation amounts to two magnitudes or more, and sometimes it does not exceed half a magnitude on the plates which were used for its confirmation. No star was included in this count if either of the three observers doubted the variation. Nine other stars were found to be variable by Mr. Bailey, but they are not included since they did not show sufficient change on the plates used in confirmation. In like manner, from an examination of seventeen plates, Mr. Bailey found forty-six variables in the cluster Messier 5 (*N. G. C.* 5904) which were confirmed on five plates. Fourteen other stars in this cluster are also probably variable but have not yet been confirmed. This cluster is frequently described as 5 M Librae, probably following Smyth. It is actually in Serpens, and very near 5 Serpentis. Two variable stars have been confirmed in *N. G. C.* 7089 from an examination of six plates, three in *N. G. C.* 7099 from five plates, five with small range in *N. G. C.* 362 from three plates, and four in *N. G. C.* 6656 from three plates. On the other hand, a similar examination of two plates of each of the clusters *N. G. C.* 6218, 6397, 6626, 6705 and 6752 failed to detect a single variable star, several hundred stars in each case apparently having exactly the same brightness on both plates. As, however, these plates were taken within a few days of each other, only variable stars of short period could have been detected on them. In general, no variables have been found within about one minute of the center of the clusters on account of the closeness of the stars. None of these variables are more than ten minutes distant from the centers of the clusters. In *N. G. C.* 5904 a circle 110′ in diameter contains sixteen stars, six of which, or nearly 40 per cent., are variable. In the entire cluster about 750 stars were examined and 46 found to be variable, as above stated, so that they form about 6 per cent. of the whole. Of all the stars visible to the naked eye less than 1 per cent. are variable.

In 1890 Mr. Packer discovered two variable stars in the cluster *N. G. C.* 5904 (*English Mechanic*, 51, 378, *Sidereal Messenger*, 9, 380, 381; 10, 107). One of these variables was discovered independently by Mr. Bailey but is not included in the above lists. Several stars in this cluster were thought to be variable by Mr. Common (*Monthly Notices*, 50, 517; 51, 226). One of them is too near the center, the others too distant to be included in the above discussion. The varia-

ble star discovered in the cluster *N. G. C.* 5272 by the writer in 1889 is also too near the center to be included.

Some of these variable stars have short periods, not more than a few hours. For instance, one of them, No. 12, which precedes the center of *N. G. C.* 5904 by about three minutes of arc. Five photographs of this cluster were taken on July 1, 1895, at intervals of an hour. The corresponding magnitudes of the variable as derived from these plates are 14.3, 13.5, 13.8, 13.9 and 14.3. Four plates taken on August 9, 1895, also at intervals of an hour, gave the magnitudes 14.2, 14.6, 14.8 and 15.0

Right ascensions and declinations cannot conveniently be used for indicating the individual stars in close clusters. They can only be found readily from photographic or other charts on which they are marked. Such charts are now being prepared for publication in the Annals of the Observatory. Meanwhile marked photographs will be sent to such astronomers as may wish to study them.[1]

EDWARD C. PICKERING.

November 2, 1895.

[1] I have examined some of the negatives of clusters photographed by Professor Bailey, and have had no difficulty in confirming the variability of several stars.

G. E. H.

Reviews.

Zur Theorie der Verbreiterung der Spectrallinien. Fürst B. Galitzin, *Wied. Ann.* **56**, 78–99 (1895).

At first sight, it might appear that a very great deal was known concerning an element when all the lines of its various spectra had been mapped and measured with a high degree of accuracy. And, indeed, this is quite true, especially for those elements whose wave-lengths have been connected by such beautifully simple laws as those of Balmer, and Kayser and Runge.

But, if one cares to realize the wide gap which still separates the science of spectroscopy from that of everyday mechanics, he has only to ask himself the dynamical meaning of the different physical features which these lines present, whether as compared with each other under the same conditions, or with themselves under different conditions.

Within the last twenty years, however, numerous attempts have been made to bridge this chasm. And, when we consider the results, the only matter for surprise is, not that so many facts remain unexplained, but that such widely divergent hypotheses as have been offered are capable, each, of predicting so many actual phenomena. This results partially, perhaps, from the fact that all these ideas are ultimately connected and contain some degree of truth, while all are, probably, still very wide of the mark.

Among these happy conjectures, that of Fürst Galitzin is at once the latest and most novel. His views are presented in the paper under review, which appeared some months ago in the *St. Petersburg Academy* and is reprinted in the current number of *Wiedemann's Annalen*.

An interesting sketch of the earlier work in this field forms a preface to the article. The ideas of Lippich, based on Doppler's principle, are quickly disposed of as incapable of explaining asymmetry in the widening of the lines. Wüllner's modification of Zöllner's theory, based on Kirchhoff's law, next comes up for discussion. Here Kayser's[1] views are adopted *in toto*. The only criticism of the molecular theory is that while it explains, in a sort of general way, the general phe-

[1] *Wied. Ann.* **42**, 310 (1891).

nomena, it does not touch the heart of the question, viz., the mechanics of the molecule.

The much neglected theory which Lommel[1] advanced in 1878 (and which, in an improved form, has been recently advocated by Jaumann) is based on three assumptions, viz., (1) that the vibrating parts oscillate in consequence of a force which is itself periodic; (2) that each of these parts is restored to its position of equilibrium by a force which can be expressed as a function of the positive powers of the distance by which the part is displaced from its position of equilibrium; (3) that the motion of the vibrating part meets with a resistance which is at every point proportional to the speed of the part.

The differential equation which expresses such a motion yields the following well-known integral, an expression which makes its appearance in almost every department of physics.

$$\chi = N \epsilon^{-kt} \sin (rt + \psi)$$

where k is the damping coefficient, r the frequency, t the time, N and ψ constants of integration. The highly original step of Lommel occurs just here, when he shows by analysis that this integral is equivalent to an infinite sum ("*continuum*") of simple sine vibrations, not containing any damping term whatever, but including all possible frequencies from $-\infty$ to $+\infty$. In other words, each line becomes a more or less rapidly shaded continuous spectrum extending to both sides of the wave-length whose frequency is r. At this point, Galitzin makes the very pertinent inquiry, Is this resolution of the damped vibration a fact of nature, or a mere mathematical trick?

The theory of Lommel and Jaumann is clearly and fairly presented. But the charge of incompetency, in numerous particulars, is urged against it with equal clearness and fairness. For instance, the theory of the damped atom offers no explanation of effects due to temperature variations. It explains the asymmetric shading and constant difference in frequency between adjacent members in certain series; but the effects of pressure are accounted for only by a most unlikely hypothesis and one quite unjustified by the kinetic theory of gases. Galitzin goes so far as to say that in the case of thermal equilibrium (say in a Geisler tube where, at each instant, as much energy is supplied to it as is radiated from it), even if the vibration *were* damped, one could not detect it, for the *mean* energy of each radiating atom would be con-

[1] *Pogg. Ann.*, 3, 251–283 (1878).

stant. Considered as an objection to Lommel's theory, however, the point does not appear to be well taken. For the fact that the mean energy of an atom remains constant is merely equivalent to saying that the intensity of the corresponding line does not vary *in time;* while all that Lommel here attempts is the explanation of the variation of the line *with wave-length, i. e.*, on either side of the maximum.

Still another difficulty advanced against the damped vibration is that the atom involved is one of gross matter. But, so far as your reviewer can see, the nature of the substance which vibrates cuts no essential figure in Lommel's discussion. His equations are rather kinematical than dynamical. And one can imagine him, if confronted by this difficulty, replying "Hypotheses non fingo!"

Galitzin's own views have for a basis the electromagnetic theory of light and the following assumptions: (1) Each luminous molecule or atom is an "exciter," a sort of Hertzian vibrator, of perfectly definite period. (2) It has a constant coefficient of self-induction, L, and a constant capacity, C. (3) But its electrical resistance, R, like that of the Amperian molecule, is zero: since, otherwise, this resistance would produce damping, and the energy of the displacement-current would sooner or later be transformed into heat of the kind considered in Joule's law. But no heat of this kind is developed *inside* the molecule; at least, the mechanical theory of heat assumes that *this* heat is due to the motion of the molecule, as a whole, in space, and not a form of energy developed inside the molecular conductor.

Such a molecular resonator would have a free period given by the equation

$$T = 2\pi\sqrt{LC}$$

and its spectrum would be a single sharp line. Such a current if left to itself, in its minute, but perfect, conductor would suffer damping, not on account of the resistance of the conductor, but from loss of energy through electromagnetic radiation.

The author next discusses the case in which *two* of these molecular vibrators are in the field at once, and proceeds to compute the effect of one on the other, assuming for this purpose that their coefficient of mutual induction is a constant during a large number of electrical vibrations in the molecule, an assumption which appears to be amply justified by the kinetic theory of gases. When the differential equations describing this state of affairs are integrated, they give this curious result, viz., each molecule has its own free period changed into

a different one depending upon the coefficient of mutual induction, and in addition has superposed upon it a forced vibration of still a different period. That is to say, each molecule now radiates light of two different wave-lengths, these two lines lying one on each side of the original line.

Another important feature of the solution is this, viz., each of these two periods depends upon the coefficient of mutual induction, and this in turn upon the distance between the two molecules. The nearer the molecules, the more the forced periods differ from the free; the farther apart the molecules, the more the forced periods approximate the free. The connection, then, between increase of pressure and widening of the lines is this: Increase of pressure diminishes the mean distance between the molecules; this, in turn, increases the coefficient of mutual induction, M, between the two. And, since the two periods are (in the case where the molecules are of the same gas)

$$T_1 = 2\pi\sqrt{C(L+M)}$$
$$T_2 = 2\pi\sqrt{C(L-M)}$$

this increase of mutual induction carries with it a change in the period of each of the two vibrations; but the change is such as always to make the divergence between them greater. When, now, the two periods are very nearly the same, as is assumed to be the case, this corresponds to a widening of the line. The relative value of the two amplitudes must determine the asymmetry.

The author next proceeds to discuss, but only in a qualitative way, the case of a gas composed of many molecules of the same kind. But the general conclusions are not very different from those arrived at in the case of only two molecules.

Considered as a first approximation in the explanation of the widening of a single definite line in the spectrum—and this is all the author claims for it—the attempt is interesting and suggestive, and the theory, perhaps, as successful as any yet proposed. However, a case of this kind is eminently one in which suspended judgment is the best judgment. H. C.

RECENT PUBLICATIONS.

A LIST of the titles of recent publications on astrophysical and allied subjects will be printed in each number of THE ASTROPHYSICAL JOURNAL. In order that these bibliographies may be as complete as possible, authors are requested to send copies of their papers to both Editors.

For convenience of reference, the titles are classified in thirteen sections.

1. THE SUN.

BIGELOW, F. H. The Status of the Solar Magnetic Problem. Sci 2, 509–513, 1895.

CORDER, HENRY. Growth and Decay of Sun-spots. Jour. B. A. A. 5, No. 9, 458–460, 1895.

LOCKYER, J. NORMAN. The Sun's Place in Nature, XI. Nat. 52, 446–450, 1895.

SCHMIDT, A. Zur Verteidigung der Schmidt'schen Sonnentheorie gegen Egon von Oppolzer. Sir. 23, 217–226, 1895.

TACCHINI, P. Résultats des observations solaires, faites à l'observatoire royal du Collège romain, pendant le premier semestre, 1895. C. R. 121, 412–414, 1895.

WULFER, A. Beobachtungen der Sonnenflecken im Jahre 1894 und Berechnung der Relativzahlen dieses Jahres, nebst Bemerkungen über die dabei angewandten Reduktionsfaktoren, u. s. w. Wolf's Astronom. Mitteilungen, No. 86, V. J. S. Naturfor. Gesell. Zürich. 40, 187–232, 1895.

2. THE SOLAR SPECTRUM, INFRA-RED, VISIBLE, AND ULTRA-VIOLET.

HALLOCK, WILLIAM. Bolometric Investigations in the Infra-red Spectrum of the Sun. Sci. 2, 174–178, 1895.

YOUNG, C. A. The "4026.5" Line and D_3. Nat. 52, 458, 1895.

3. STARS AND STELLAR PHOTOMETRY.

ROBERTS, ISAAC. Photographs of the Cluster Messier 13 Herculis. Knowl. 18, 232, 1895.

ROBERTS, ALEX. WM. Period of 3416 S Velorum. Ast. Jour. No. 354, 15, 149–150, 1895.

WILSON, H. C. Photographing the Milky Way. Pop. Ast. 3, 58–62, 1895.

WOODS, C. RAY. An Item in Astro-Photography. Photo. Times, 27, 281, 1895.

YENDELL, PAUL S. Ephemeris of Variables of the Algol-Type. Ast. Jour. No. 354, 15, 153–55, 1895.

YENDELL, PAUL S. Observations of Variable Stars of the Algol-Type, 1893–5. Ast. Jour. No. 355, 15, 153–155, 1895.

YENDELL, PAUL S. On Two Recently Announced Variables. Ast. Jour. No. 355, 15, 157, 1895.

5. PLANETS, SATELLITES AND THEIR SPECTRA.

BÉLOPOLSKY, A. Spectrograpische Untersuchungen des Saturnringes. A. N. 139, 1–5, 1895.

ELGER, T. GWYN. Third Report of the Section for the Observations of the Moon. Mem. B. A. A., 3, 151–191, 1895.

ELGER, T. GWYN. Selenographical Notes. Obs'y 18, 361, 1895.

FLAMMARION, C. Visibilité de l'hémisphère obscure de Venus. Bull. Soc. Astr. France, 1, 297–302, 1895.

KEELER, J. E. Note on the Rotation of Saturn's Rings. A. N. 139, 5–7, 1895.

LYNN, W. T. The Visibility of the Dark Side of Venus. Obs'y 18, 362, 1895.

MEYER, M. WILHELM. Das Weldbild des Mars, wie es sich nach den Beobachtungen von 1892 und 1894 darstellt. Him. & Erde. No. 1, 8, 15–40, 1895.

PICKERING, W. H. Atmosphère et rivières lunaires. Bull. Astr. Soc. France, 1, 306–316, 1895.

SUESS, EDWARD. The Moon as seen by a Geologist. Pub. A. S. P. 7, 139–148, 1895.

WELLS, H. G. The Visibility of Change in the Moon. Knowl. 18, 230, 1895.

6. COMETS, METEORS, AND THEIR SPECTRA.

HUSSEY, W. J. A Study of the Physical Characteristics of Comet Rordame. Pub. A. S. P. 7, 185–191, 1895.

MOISSAN, HENRI. Étude de quelques météorites. C. R. 121, 483–486, 1895.

MONCK, W. H. S. Stationary Meteor-radiants. Obs'y 18, 365, 1895.

7. NEBULÆ AND THEIR SPECTRA.

JAVELLE. Nébuleuses découvertes avec le Grand Equatorial. Ann Obs. de Nice, 4, B 5–B 28, 1895.

8. TERRESTRIAL PHYSICS.

BAUER, L. A. Distribution and Secular Variation of Terrestrial Magnetism, No. III. Am. Jour. Ser. 3, 50, 314–326, 1895.

PAULSEN, A. La nature et l'origine de l'aurore boréale. Ciel et Terre. No. 11, 259–266, 1895.

POINCARÉ, A. Des effets des révolutions synodique et anomalistique de la Lune sur la distribution des pressions dans la saison de printemps. C. R. 121, 468–471, 1895.

———. Observations magnétiques faites a l'Obsérvatoire de Nice. Ann. Obs. de Nice, 5, B 1–B 23, 1895.

9. EXPERIMENTAL AND THEORETICAL PHYSICS.

BIDWELL, SHELFORD. The Electrical Properties of Selenium. Phil. Mag. 40, 233–256, 1895.

BOREL, G. ADOLPHE. Recherches sur la réfraction et la dispersion des radiations ultra-violettes dans quelques substances cristallisées. Arch. de Genève, No. 9, 34, 230–248, 1895.

BROCA, A. Sur la courbure de la surface des systèmes optiques centrés. Séan. Soc. Fr. Phys. 67–74, 1895.

CAMICHEL, C. Absorption de la lumière dans les cristaux. Séan. Soc. Fr. Phys., 50–56, 1895.

FOUSSEREAU, G. Sur l'astigmatisme des lentilles infiniment minces et des miroirs sphériques. Séan. Soc. Fr. Phys., 74–83, 1895.

FOUSSEREAU, G. Sur l'entraînement des ondes lumineuses par la matière en mouvement. Séan. Soc. Fr. Phys., 26–33, 1895.

GALITZIN, B. Zur Theorie der Verbreiterung der Spectrallinien. Wied. Ann. 56, 78–99, 1895.

KOWALSKI, DE. Sur la reproduction des rayons cathodiques. Séan. Soc. Fr. Phys., 20–22, 1895.

LIVEING and DEWAR. On the Refraction and Dispersion of Liquid Oxygen, and the Absorption Spectrum of Liquid Air. Phil. Mag. 40, 268–272, 1895.

PELLAT, H. Théorie du phénomène de l'aberration dans le cas d'une lunette pleine d'eau. Séan. Soc. Fr. Phys., 14–17, 1895.

PERREAU, F. Étude expérimentale de la dispersion et de la réfraction des gaz. Jour. de Phys. 4, (3me sér.) 411–416, 1895.

PUPIN, M. I. Studies in the Electro-Magnetic Theory, I. The law of electro-magnetic flux. Am. Jour. Ser. 3, 50, 326–341, 1895.

STONEY, GEORGE JOHNSTONE. On the Kinetic Theory of Gas, regarded as illustrating Nature. Phil. Mag. 40, 362–383, 1895.

STEVENS, W. LE CONTE. Recent Progress in Optics. Am. Jour. Ser. 3, 50, 277–286, 1895.

WIEDEMANN, E. und SCHMIDT, G. C. Ueber Lichtemission organischer Substanzen im gasförmigen, flüssigen und festen Zustand. Wied. Ann. 56, 18–26, 1895.

10. THE SPECTRA OF THE ELEMENTS.

LOCKYER, J. NORMAN. On the new Gas obtained from Uraninite. Proc. R. S. No. 350, 58, 192, 193, 1895.

RUNGE, C. and PASCHEN, F. On the Constituents of Clèveite Gas. Phil. Mag. 40, 297–302, 1895.

RUNGE, C. and PASCHEN, F. On the Constituents of the Gas in Clèveite. Nat. 52, 520–522, 1895.

11 PHOTOGRAPHY.

IVES, FREDERIC E. Orthochromatic Photography with ordinary Plates. Photo. Times No. 3, 27, 180–182, 1895.

12. INSTRUMENTS AND APPARATUS.

BURCKHALTER, CHAS. On a Method of Photographing the Corona during a Total Eclipse, by which each Part may be given any Exposure desired on the Same Plate. Pub. A. S. P. 7, 157–161, 1895.

HADDEN, DAVID E. The Grating Spectroscope for Small Telescopes. Pop. Ast. 3, 84–86, 1895.

LIPPMANN, G. Sur un coelostat, ou appareil à miroir, donnant une image du ciel immobile par rapport à la Terre. Jour. de Phys. 4, (3me sér.), 397–401, 1895.

PRINZ, W. Le miroir du grand sidérostat de L'Exposition de Paris. Ciel et Terre. No. 12, 287, 1895.

SCHAEBERLE, J. M. Description of a New Cassegrainian Telescope, Equatorially Mounted, Having an Equivalent Focal Length of Two Hundred and Fifty feet. Pub. A. S. P. 7, 185–191, 1895.

STREHL, KARL. Aplanatische und fehlerhafte Abbildung im Fernrohr. Z. f. Instrum. No. 10, 15, 362–370, 1895.

NOTICE.

The scope of THE ASTROPHYSICAL JOURNAL includes all investigations of radiant energy, whether conducted in the observatory or in the laboratory. The subjects to which special attention will be given are photographic and visual observations of the heavenly bodies (other than those pertaining to "astronomy of position"); spectroscopic, photometric, bolometric and radiometric work of all kinds; descriptions of instruments and apparatus used in such investigations; and theoretical papers bearing on any of these subjects.

In the department of *Minor Contributions and Notes* subjects may be discussed which belong to other closely related fields of investigation.

It is intended to publish in each number a bibliography of astrophysics in which will be found the titles of recently published astrophysical and spectroscopic papers. In order that this list may be as complete as possible, and that current work in astrophysics may receive appropriate notice in other departments of the JOURNAL, authors are requested to send copies of all papers on these and closely allied subjects to both Editors.

Articles written in any language will be accepted for publication, but unless a wish to the contrary is expressed by the author, they will be translated into English. If a request is sent *with the manuscript* twenty-five reprint copies of each paper, bound in covers, will be furnished free of charge to the author. Additional copies may be obtained at cost price. No reprints can be sent unless a request for them is received before the JOURNAL goes to press.

The Editors do not hold themselves responsible for opinions expressed by contributors.

THE ASTROPHYSICAL JOURNAL will be published on the first day of every month except July and September. The annual subscription price for the United States, Canada and Mexico is $4.00; for other countries in the Postal Union it is 18 shillings. Correspondence relating to subscriptions and advertisements should be addressed to *The University of Chicago, University Press Division, Chicago, Ill.*

Wm. Wesley & Son, 28 Essex St., Strand, London, are sole foreign agents, and to them all European subscriptions should be addressed.

All papers for publication and correspondence relating to contributions and exchanges should be addressed to *George E. Hale, Kenwood Observatory, Chicago, Ill.*

PLATE X

S

W

N

PHOTOGRAPH OF THE TOTAL PHASE OF THE LUNAR ECLIPSE OF SEPT. 3, 1895

By E. E. BARNARD, Lick Observatory

(9h 57m to 10h 06m Standard Pacific Time) Six-inch Portrait Lens

ASTROPHYSICAL JOURNAL

AN INTERNATIONAL REVIEW OF SPECTROSCOPY AND ASTRONOMICAL PHYSICS

VOLUME II DECEMBER 1895 NUMBER 5

ON THE OCCURRENCE IN STELLAR SPECTRA OF THE LINES OF CLÈVEITE GAS, AND ON THE CLASSIFICATION OF STARS OF THE FIRST SPECTRAL TYPE.

By H. C. VOGEL.

EVER since the application of spectrum analysis to the heavenly bodies, the attention of astrophysicists has been attracted by a line in the neighborhood of the familiar double line of sodium, which always appears in the spectrum of the solar chromosphere in connection with the lines of hydrogen, and has an intensity of the same order as the latter. It has also been observed in the spectra of some of the few stars in which the hydrogen lines are bright. The unknown substance to which this line belongs has been called helium, and the line, on account of its proximity to the lines D_1 and D_2 of the sodium spectrum, is known as D_3.

It was reserved for Ramsay to discover, at the beginning of the present year, in the rare mineral Clèveite, a gas in the spectrum of which the helium line D_3 appeared as one of the strongest lines; and the admirable investigation of the spectrum of Clèveite gas by Runge and Paschen, shortly after this most interesting observation, is not without significance for stellar spectrum analysis, as I shall proceed to show.

I first arrange, in a convenient form for the present investigation, the table of wave-lengths which Runge[1] has given for the lines in the spectrum of gas derived from Clèveite, adding also the estimates of the intensities of the lines which Professor Runge has kindly sent me. The brightest lines are indicated by 10, while those lines are indicated by 0 which were perceptible, but too faint to permit an estimate of their intensity relatively to the stronger lines in the spectrum. The difference of intensity between the components of the close double lines is very great; it may be assumed that the more refrangible component is ten times more intense than the less refrangible.

In the course of his investigations, Professor Runge has been led to the assumption that the spectrum which he observed does not belong to a single substance, but to a heavier gas (helium) and a lighter gas. The lines of helium are indicated by an asterisk.

Only those lines between the wave-lengths 3700 and 7070 are given in the following table, as they alone need be considered in comparisons with star spectra.

SPECTRUM OF CLÈVEITE GAS.

	Wave-length (Rowland)	Intensity		Wave-length (Rowland)	Intensity
*	3705.15	3	*	4026.35	5
	.29			.52	
*	3733.01	1.5	*	4120.98	2.5
	.15			1.14	
*	3819.75	4		4143.91	2
*	.89			4169.12	1
	3833.7	0		4388.11	3
	3838.2	0		4437.73	1.5
*	3867.61	2	*	4471.66	6
	.77			.85	
	3871.9	0.5	*	4713.17	3
	3878.3	0		.39	
*	3888.76	10		4922.08	4
	.97			5015.73	6
	3926.8	0.5		5047.82	2
	3936.1	0	*	5875.88	10
*	3964.84	4		6.21	
	5.08			6678.4	6
	4009.42	1	*	7065.51	5
	4024.14	0		.77	

[1] *Sitzungsberichte* d. K. Akad d. W. Berlin, 1895. Part XXX., 639 and Part XXXIV, 759.

At a meeting of the Berlin Academy on February 8, 1894, I described the peculiar double spectrum of β Lyrae, and the corresponding published paper[1] was mainly devoted to an investigation of the changes of the bright and dark pairs of lines, which are related to the variation of the star's brightness and are probably caused by the motion of two or more bodies. It was shown that the atmospheres of the component stars must be assumed to have the same constitution, but to differ with respect to density and state of incandescence. In the same paper were also given my determinations of the wave-lengths of the different lines in the spectrum of β Lyrae, and a comparison of them with the lines in the spectrum of Clèveite gas has led to a surprising result with regard to the number of these lines which are present in the spectrum of the star.

I have lately remeasured some of the best spectrograms, and have found on them three more lines belonging to the spectrum of Clèveite gas, which were overlooked at the first measurement on account of their faintness.

Adding the line D_3 which has been known in the spectrum of this star for many years, two lines in the green, measured by Keeler[2] and by Bélopolsky[3], and finally a line whose wave-length, with that of four others, was determined by me as well as by Lockyer[4] and Bélopolsky, there results the following table of wave-lengths of the lines of Clèveite gas which are present in the spectrum of β Lyrae.[5]

[1] *Sitzungsberichte* d. K. Akad. W. Berlin, 1894, Part VI., 115.

[2] *A. and A.* 12, 350, 1893.

[3] *Mél. Math. et Astron. St. Petersb.* 7, 1893.

[4] *Proc. R. Soc.* 56, 284.

[5] It should be mentioned here that, according to Keeler's observations (*Astronomy and Astro-Physics*, 12, 361, 1893), the variable star P Cygni has a double spectrum resembling hat of β Lyrae, and that there are present in the spectrum of this star, besides the hydrogen lines $H\gamma$ and $H\beta$ and perhaps the D lines, the lines λ4922, λ5016 and D_3 of the spectrum of Clèveite gas.

An excellent photograph of the spectrum of P Cygni taken within the last few days by Dr. Wilsing confirms the observations of Keeler. The spectrum is very similar to that of β Lyrae at the time of a principal minimum; bright and dark lines are

LINES OF CLÈVEITE GAS IN THE SPECTRUM OF β LYRAE.

Wave-length	Remarks
3704	Weak absorption line. Not separable from $H\xi$.
3735	Weak absorption line. Not separable from $H\lambda$.
3820	Strong absorption line.
3869	Measured subsequently; very faint.
3874	Measured subsequently; doubtful, since the discrepancy amounts to 2 Ångström's units.
3889	Most intense line in the spectrum of β Lyrae. Without doubt a summation of the line $H\zeta$ and the strongest line in the spectrum of Clèveite gas.
3927	Weak absorption line.
3965	Observed as a sharp, strong line close to $H\epsilon$.
4010	Delicate line. Subsequent measures gave λ=4008.
4026	Intensity nearly that of the hydrogen lines.
4120	Weak line.
4143	Delicate line.
4388	Broad absorption line.
4438	Measured subsequently; very faint; easily overlooked without a knowledge of its approximate position.
4470	Broad, conspicuous line.
4714	Observed by Lockyer and Bélopolsky.
4923, 5016	Observed by Bélopolsky and Keeler.
5876	D_3.

Incited by the interesting result of the comparison of the spectrum of Clèveite gas with the spectrum of β Lyrae, and being satisfied with the accuracy of the wave-length determinations in so short a spectrum (10^{mm} from λ 3700 to λ 4500), I searched for the lines of Clèveite gas in other stellar spectra. For this purpose I had at my disposal a wealth of observational

in close juxtaposition. The lines are, however, narrower than those of β Lyrae, and the bright lines are more intense relatively to the continuous spectrum. I have made the following determinations of wave-lengths:

λ 3836	λ 4121
3889	4143
3966	4340
3970	4371
4026	4388
4101	4470

Of the twelve lines measured, seven belong to the spectrum of Clèveite gas.

material accumulated by Dr. Wilsing, who began two years ago, in accordance with my instructions, to photograph the spectra of all stars of the first class down to the fifth magnitude, with the 13-inch photographic refractor and small spectrograph which had been used in taking the spectrograms of β Lyrae. Since the line $\lambda 4471$, which plays an important rôle in the spectra of the Orion stars, belongs to the Clèveite gas spectrum, and since Ramsay's discovery has thrown light on the origin of this line, I began by examining the spectra of the brighter Orion stars.

It is not my intention to give here a detailed account of the investigation; on the contrary I shall make the account as short and condensed as possible, since a complete investigation of the spectra will be made jointly by Dr. Wilsing and myself when the material shall have been collected, and the results are expected to appear in the publications of the Observatory. At present only about a third of the spectrograms have been taken. In the following table I have therefore given only those lines which can be identified with the lines of Clèveite gas. The brightest line $\lambda 3889.0$ so nearly coincides with $H\zeta$ ($\lambda 3889.1$) that separation would not be possible, even with a considerably greater dispersion than that which was employed. However, as I have already remarked in connection with the spectrum of β Lyrae; this line may become especially conspicuous by the summation of the lines of the two different substances, and I have therefore given the estimates of brightness (omitting all other numerical results) relatively to the line of Clèveite gas which coincides with $H\zeta$. A line $\lambda 3936.1$ just perceptible in the Clèveite gas spectrum falls close to the calcium line $\lambda 3933.8$, and since the occurrence of the calcium line is of interest, as I shall show further below, I have included this line also in the table, expressly remarking, however, that its occurrence even when it is very weak, is a proof of the presence of calcium rather than that of Clèveite gas.

As I have just remarked, only the estimates of the relative intensities of the lines are given in the table (the weakest lines are represented by 1, the strongest by 10), and not the wave-

lengths deduced for each line; but I may state that the identity of the lines with those of Clèveite gas (or calcium) was assumed when the wave-lengths agreed within two tenth-meters.

LINES OF CLÈVEITE GAS IN THE SPECTRA OF THE ORION STARS

Clèveite Gas		β	γ	δ	ε	ζ	λ	ν	ϖ_3	ϖ_5	ω
Wave-length	Intensity	Orionis	Orionis	Orionis	Orionis	Orionis	Orionis	Orionis	Orionis	Orionis	Orionis
* 3820	4	4	10	5	3	3	..	7	6	6	..
* 3868	2	1?	..	..	..	..	..	..	..	..	..
3872	0.5	..	..	..	..	..	..	..	..	..	..
* 3889	10	10	10	10	10	10	10	10	9	9	9
3927	0.5	1	..	2	..	..	..	2	3	..	..
(Ca 3934)	—	8	..	2	2	..	..	1	..	2	..
3965	4	2	..	..	..	..	3	1	2	..	..
4009	1	..	3	..	..	3	..	2	1	3	3
* 4026	5	4	8	6	4	3	6	10	8	7	7
* 4121	2.5	1	3	..	..	..	1?	..	..	..	..
4144	2	..	4	4	..	..	2	3	4	3	3
4169	1	1	..	3	..	..	..	..	..	..	..
4388	3	..	2	3	..	3	..	2	3	2	..
4438	1.5	1?	..	..	..	..	..	..	..	..	..
* 4472	6	?	4	4	2	3	..	3	3	1?	..

REMARKS.

One of the two excellent photographs of the spectrum of β Orionis was made quite narrow; between $H\gamma$ and $H\beta$ the spectrum is so dense that the delicate lines less refrangible than $H\gamma$ cannot be recognized. The other photograph, with broad spectrum, is somewhat weak near $H\gamma$, so that on this plate also the fainter lines cannot be recognized with certainty. Both plates of ε Orionis are too dense, so that the fine details are lost.

The five brightest Orion stars, β, γ, δ, ε and ζ have been investigated by Scheiner,[1] by means of the Potsdam photographs of star spectra in the $H\gamma$ region, taken with the large spectrograph, and also by Keeler,[2] who paid particular attention to the less refrangible parts of the spectrum. Scheiner found in the Orion stars the following lines of Clèveite gas:

Wave-length	Star
4388	β, γ, ε Orionis
4438	β Orionis
4472	β, γ, δ, ε and ζ Orionis

[1] *Pub. des Astrophys. Observ.*, 7, Part II.

[2] "On the spectra of the Orion Nebula and the Orion Stars." *A. and A.*, 13, 476, 1894.

Keeler observed in the same Orion stars and also in the trapezium star Bond 628, the lines:

Wave-length	Star
4026	β, γ, ϵ and ζ Orionis
4388	β, γ, ϵ, ζ Orionis and Bond 628
4438	β Orionis
4472	β, γ, δ, ϵ, ζ Orionis and Bond 628
4713	β, γ, δ, ϵ, ζ Orionis and Bond 628
4922, 5016, D_3 5876	β Orionis.

Hitherto the view has been held that stars of the Orion type, in which the existence of Clèveite gas may be regarded as proved by the observations given above, are rather sparsely distributed in other quarters of the heavens. Scheiner,[1] in his researches on the spectra of the brighter stars, gives the following additional stars in the spectra of which the "Orion line" λ 4472 is visible: α Virginis, β Persei, β Tauri and η Ursae Majoris. I was therefore surprised to find, on examining the spectra of about 150 of the brighter first type stars, no fewer than 25, besides the ten Orion stars and the four stars described by Scheiner, whose spectra contained the lines characteristic of the Orion stars, or in other words, the spectral lines of Clèveite gas.

A correct view of the distribution of these stars in the sky can be obtained only after the completion of the work which has been planned here—that of preparing and investigating spectrograms of all stars of the first class down to the fifth magnitude, and this work, as I have said, is only about one-third completed. I give below a few of the stars in whose spectra the lines of Clèveite gas are well marked, omitting all other lines except the calcium line λ 3934.

[1] *Pub. des Astrophys. Observ.*, 7, Part II., 152.

STARS OF THE FIRST CLASS WHOSE SPECTRA CONTAIN THE LINES OF CLÈVEITE GAS.

Clèveite Gas		102 Herculis	ι Herculis	α Virginis	γ Pegasi	β Piscium	β Cephei	μ Herculis	ι Andromedae	τ Herculis	ζ Draconis	η Leonis	ζ Pegasi	β Persei	η Aurigæ
Wave length	Int.														
* 3820	4	8	5	2	9	..	5	5	..	5	3	..	..	..	7
* 3868	2	2	1	..	5	2	..	..	2	2	2	..	5	2	..
3872	0.5	1	..	..	..	..	..	..	2?	..	..	..	..	..	..
3878	0	..	1.5	2?	..	..	..	..		..	..	..	..	..	..
* 3889	10	10	9	10	10	10	10	10	10	10	10	7	10	10	10
3927	0.5	4	2	2	2	..	..	1?	2	..	..	..	..	..	..
(Ca 3934)	—	2	1.5	..	..	3	3	1?	2	1.5	..	4	..	2	..
3965	4	4	..	..	..	..	..	..	..	..	..	3	..	..	..
4009	1	3	5	3	2	2	..	4	..	..	..	..	..	..	..
* 4026	5	8	6	4.5	7	6	10	8	3	5	4	4	5	3	3
* 4121	2.5	3	2	2.5	2	..	..	4	..	..	..	..	..	..	..
4144	2	3	3	2.5	2	2	5	..	..	..	..	..	..	..	..
4169	1	1	..	..	..	..	..	..	..	..	..	..	..	..	..
4388	3	2	4	2.5	2	..	2	..	..	..	2	..	..	..	..
4438	1.5	2	..	2?	..	2	..	..	1.5	..	..	..	1?	..	..
* 4472	6	3	3	3	2.5	1.5	3	3	?	2	2	2	1	1.5	4

REMARKS.

The explanation of the fact that the line λ 3965 was observed in only two stars may be, that this line is so close to the calcium line λ 3969 and the hydrogen line *H*ε (λ 3970) that it falls within their broad, diffuse borders. This line is moreover the brightest of the lines of the "lighter gas" in the part of the spectrum which I investigated, and it is worthy of remark that in a few spectra the other lines of the lighter gas have not been observed; hence it is possible that there are stars whose spectra contain the helium lines only. In my opinion these observations are not sufficient to prove the separate occurrence of the components of the gas obtained from Clèveite. To establish such a proof it would be necessary to investigate the less refrangible parts of the spectrum, in which the most intense lines of the lighter gas, λ 4922, λ 5016 and λ 6678 are found, and the instrumental means which are at present at my disposal are insufficient for this purpose.

The examination of these numerous spectra has again strengthened my opinion that only general and far-reaching characteristics should be considered in classifying stars according to their spectra, and that a rational system of classification is conceivable, only on the basis that the different spectra of the stars are indications of different stages of development. In my opinion it is to be regretted that, in the comprehensive spectro-

scopic Durchmusterung of stars down to the 7th magnitude, which Pickering has undertaken with an object-glass prism, the stars are classified without reference to any general considerations, but are merely divided into sixteen classes, designated by the letters *A* to *Q*, according to the appearance of the spectrum, which is frequently liable to misinterpretation in the case of improperly-timed exposures, especially those on the brighter stars.

Notwithstanding the enormous advance of stellar spectroscopy in late years, the classification of the spectra of the stars which I proposed more than twenty years ago,[1] on the basis mentioned above, has only been confirmed by more recent researches, and among others by the refined and detailed investigations of star spectra by Scheiner.

With regard to stars of the third spectral type, visual observations of the less refrangible parts of the spectrum are still to be preferred to photographs for purposes of classification. For the subdivisions *a* and *b* of my system, the criterion for deciding which of the two represents the more advanced stage of development, is entirely lacking. Only this much can be said, that in both subdivisions the atmospheres of the stars have so far cooled that dissociation has come to an end, and chemical combinations can exist. There are consequently no grounds for placing the stars of class III*b*, the absorption bands of which are mainly produced by hydrocarbons, in a special IV class. For the same reasons given above, direct observation is also very effective for recognizing the spectra of stars belonging to class II. Here also there are no grounds for introducing other subdivisions than the two which I have adopted, until more precise investigations of the spectral type II*b* shall have become available.

It is otherwise with stars of class I. In the case of these stars the application of photography allows a more complete general examination of the spectrum to be made, and a nicer discrimination of characteristic points of difference, than was possible by the older method. The study of their spectra is also

[1] *A. N.* No. 2000.

of especial interest in this respect, that starting with the simplest spectra, in which the lines of hydrogen can alone be recognized, their further development can be followed, from the first traces of lines due to other substances, to the countless lines which mark the spectra of the second type. Further researches on the details of first type spectra will perhaps make it possible to discover the beginnings and separate terms of the two divergent series which end in the apparently widely different spectra of type III*a* and type III*b*.

In particular the observations communicated above have led me to believe that the appearance of the lines of Clèveite gas in star spectra is in every way worthy of attention, and that it may furnish a useful means for the classification of spectra. With respect to its spectral behaviour, Clèveite gas has a great similarity to hydrogen, a fact which has long been recognized by the constant appearance of the D_3 line in all parts of the solar chromosphere, and also in the solar prominences, in company with the hydrogen lines, so that with these lines the appearance of the lines of Clèveite gas is first of all to be expected. The spectrum of this gas contains few lines, and can be recognized with special facility. Although the brightest line λ 3899 so nearly coincides with the hydrogen line $H\zeta$ (which is never absent in spectra of the first type) that a separation is not possible, while the summation of these strong lines will seldom appear as plainly as in the case of β Lyrae, nevertheless the lines λ 3820, λ 3868, λ 4026 and λ 4472, and in the less refrangible regions the lines λ 4922, λ 5016 and the D_3 line (λ 5876) can be found so easily, and identified with such certainty, that the proof of the existence of Clèveite gas offers no difficulty. In the more refrangible part of the spectrum, it is sufficient to ascertain the presence of the line λ 4026, which does not fail in any of the spectra, hitherto investigated, containing the lines of Clèveite gas. In the prismatic spectrum it lies nearly half way between the hydrogen lines $H\epsilon$ and $H\delta$.

A second appropriate means of distinguishing subdivisions of the first spectral class is furnished by the appearance of the

calcium lines λ3933.8 and λ3968.6, the latter of which nearly coincides with the hydrogen line $H\epsilon$ (λ3970.2). If the former line is narrow and sharp, the influence of the latter on the $H\epsilon$ line will be very small. If, however, the calcium lines become broader and more intense, the widening of $H\epsilon$ becomes very perceptible, and both lines soon exceed, with respect to breadth and intensity, the strong and generally broad hydrogen lines in spectra of the first type. At a still more advanced stage of development they form the pair of lines, so characteristic of the second spectral type, which Fraunhofer designated by the letter H.

I believe that the divisions of the stars of the *first* spectral class, which I venture to give below, corresponds to the present state of science, and that it will be serviceable for a considerable time in the future. In its arrangement I have endeavored to keep as close as possible to my previous method of classification. According to the present standpoint, it might seem better to give the first place to the few stars whose spectra contain *bright* lines, as representing the first stage of development; but since, in my opinion, a final decision of this question is not yet possible, I have retained the order of my former series, on formal grounds, and have again placed these stars together under a third subdivision, *c*.

In view of more recently acquired knowledge, the definition of class I*b* was found to be inadequate, and in the course of time I recognized the necessity of a change, and indeed suggested one.[1] It has lately been proposed, on the ground of elaborate researches on the spectra of β Orionis and α Cygni, to define class I*b* of my earlier classification as that class of stars in whose spectra the hydrogen lines and metallic lines all appear to be of equal breadth and sharp definition.[2] However justifiable it may be to regard the peculiarly sharp spectral lines of the stars above mentioned, and a few others of the same kind, as worthy of special consideration, the adoption of this proposal would make it necessary to separate a number of stars (including those of

[1] *A. N.* No. 2839.

[2] Scheiner, *Spectralanalyse der Gestirne*, p. 271.

Orion) whose relationship is placed beyond question by the investigations I have referred to, and to place them with α Cygni, which has a materially different spectrum. The hydrogen lines in the spectra of class I differ so greatly in breadth and diffuseness, that the narrow and sharply bounded lines in the spectra of β Orionis and α Cygni may be regarded as a remarkable, but at the same time as only an individual peculiarity of these spectra. In my opinion, now that Clèveite gas has been discovered, the definition of spectra of class I*b* can be finally established.

Class I of Stellar Spectra.

Continuous spectra, whose more refrangible parts, blue and violet, are remarkable for their intensity. The spectra are crossed by the entire series of hydrogen lines, which appear as dark, broad and diffuse, rarely as sharply defined (and then narrow) lines of absorption. In general, the intensity of the hydrogen lines materially exceeds that of other metallic lines in the spectrum.

Quite rarely the lines of hydrogen and other substances do not appear as absorption lines; in this case they appear as bright lines on a continuous spectrum.

a.

1. Spectra in which the hydrogen lines are broad and strongly developed, but in which other spectral lines cannot be recognized.

2. Spectra in which lines of other metals (calcium, magnesium, sodium) appear, in addition to the hydrogen lines, but which contain no lines of Clèveite gas. The calcium line λ 3934 in these spectra appears sharply defined; its breadth is not nearly equal to that of the hydrogen lines. The spectral lines of other metals are delicate, and not easily recognized with low dispersion.

3. Spectra in which the calcium line λ 3934 has nearly the same intensity as the hydrogen lines. In occasional instances it is still sharply defined at the edges; or it may be broader and more intense than the hydrogen lines, and very diffuse, forming,

with the hydrogen line $H\epsilon$ (λ 3970), which is greatly intensified and broadened by the calcium line λ 3969, a conspicuous pair, In the spectra of this division the lines of Clèveite gas cannot be recognized; on the other hand, numerous strong lines of different metals, particularly the lines of iron, are always present. The lines of hydrogen are still always dominant. $H\delta$ is plainly apparent among the other lines, and the group G is less conspicuous than $H\gamma$.

This subdivision forms the direct connecting link with the spectral class II, in which the hydrogen lines no longer play a prominent part in comparison with the lines of other metals.

b.

Spectra in which, besides the still dominant hydrogen lines, the lines of Clèveite gas appear, and above all the lines λ 4026, λ 4472, λ 5016 and λ 5876 (D_3). (The strongest line in the violet λ 4889, is so nearly coincident with $H\zeta$ that it is not a reliable criterion of the presence of lines of Clèveite gas in star spectra). The lines of calcium, magnesium, sodium and iron are also more or less numerous in spectra of this subdivision.

c.

1. Spectra with bright hydrogen lines.

2. Spectra in which, besides the hydrogen lines, the lines of Clèveite gas and the lines of calcium, magnesium and other metals are bright.

It scarcely needs to be mentioned that a sharp separation of the different subdivisions is not possible, and that, to a certain extent, the assignment of spectra to them will depend upon the excellence of the instrument which is used, and the correctness of the exposure when plates are obtained by photography. According to our experience up to the present time, the discrimination between I*a*1 and I*a*2 offers greater difficulty than that between other subdivisions, and the number of spectra coming under the heads I*a*1 and I*c*1 will always be small.

Under I*a*2 may be placed the spectra of α Canis Majoris and

α Lyrae; under I*a*3 α Cygni, standing near the limits of transition into class II, β Cassiopeiae and α Canis Minoris. To subdivision *b* belong most of the Orion stars, β Persei (Algol), α Virginis, and one of the components of β Lyrae, while the other component of β Lyrae is to be classed under I*c*2. If the peculiar spectrum of Pleione is regarded as a double spectrum, it belongs equally to I*a*1 and I*c*1, as the hydrogen lines (no other lines can be recognized with the Potsdam spectrograph) appear as broad absorption lines with bright lines in the middle. If however it is assumed that the hydrogen lines have merely suffered a double reversal, the spectrum of this star is to be classed under I*a*1.

Judging by the number and strength of the metallic lines which appear coincidently with the lines of hydrogen, the spectra of class I*b* are, with respect to their places in the scale of development, to be classed with I*a*2 and I*a*3. Although at present no such clearly marked evidence of transition into class II can be given for these stars as for stars of the subdivision I*a*3, some of the spectra, in which the existence of Clèveite gas can be proved, contain a large number of lines, so that the descent between class I*b* and class II is at least not too abrupt. That there is actually a gradual transition cannot be doubted, for Clèveite gas is found in the Sun, a star of the second spectral class, although it is known that the lines of this gas are not there reversed.

ON A PHOTOGRAPHIC SEARCH FOR A SATELLITE TO THE MOON.

By E. E. Barnard.

During the total lunar eclipses of March 10 and September 3, 1895, I took the opportunity at the Lick Observatory to make a series of photographs of the Moon in the shadow, with the six-inch Willard lens.

These pictures were made to test the possible existence of a lunar satellite. Though, of course, no satellite was found, the results are nevertheless very interesting.

If our Moon had a small satellite revolving about it, such, on account of the enormous brightness of the Moon itself, might never be seen by any of the visual methods. To successfully photograph it under the ordinary conditions would be perhaps impossible because of the spreading of the Moon's light.

If, however, we could obscure the Moon so that it could not illuminate our atmosphere in its direction, we might give a sufficiently long exposure to show any such satellite if it existed near the Moon, and of a brightness so great as the 10th or 12th magnitude.

Such an opportunity is presented during a total lunar eclipse, at which time the faintness of the Moon and its red color would prevent its light spreading on the plate or illuminating our atmosphere. If during any part of this time the satellite should be outside of the shadow and fully illuminated it might be easily photographed.

There does not seem to be any reason to suppose that any such satellite attends our Moon; yet it is a point that has sufficient plausibility about it to suggest a photographic search.

It was therefore with this end in view mainly that I decided to make a series of photographs with the Willard lens during

the total phases of the lunar eclipses of 1895, March 10 and September 3.

The results obtained during the eclipse of March 10, 1895, were not entirely satisfactory because the sky was rather hazy. The photographs then obtained, however, showed the Moon clearly in the shadow.

The eclipse of 1895, September 3, was entirely satisfactory, as the sky was perfectly clear and the duration of totality was very long.

On this last occasion a series of six splendid photographs were obtained of the total phase.

The motion of the Moon of course made it necessary to guide the telescope carefully by hand independently of the regular clock motion. It was difficult to find any lunar marking sufficiently small and distinct for accurate guiding.

The Mare Crisium was finally selected as the most suitable mark, and this was kept carefully and accurately bisected by the wires in the guiding telescope; it required constant attention as the motion of the Moon was considerable. That this was carefully attended to is shown by the sharpness of the resulting images. I have certainly never seen such exquisite pictures of the Moon as those made during totality with the Willard lens. The details of the surface are clearly and beautifully shown and the Moon stands out from the sky like a beautiful globe.

None of these pictures made during the two eclipses shows anything which might be taken for a lunar satellite.

During the eclipses of the Moon in January (28) and July (22), 1888, photographs of the total phases were made at the Harvard College Observatory, and I believe with the same idea of a search for a possible satellite.

Inasmuch as none of these photographs made during these different eclipses has shown any evidence of a lunar satellite, I think we are fairly justified in assuming that such a body does not exist of sufficient brightness to be detected with our most sensitive photographic plates, and a further search for it therefore appears quite unnecessary.

In speaking of the Harvard College photographs of the total lunar eclipses of 1888, I have before me now a glass copy of one of these made during totality January 28, 1888. This picture, though it shows the Moon well in the shadow, does not show the details distinctly; they are more or less blurred and lost through a lack of careful guiding. From the star trails it would appear that the telescope had been adjusted to the motion of the Moon and then left to take care of itself during the exposure.

Of the six photographs made at the Lick Observatory during totality on September 3, 1895, I have selected the one nearest the time of central eclipse for reproduction here (Plate X). This was exposed from $9^h\ 57^m$ to $10^h\ 06^m$ Standard Pacific Time, and was made on a Seed 10 x 8 plate of sensitometer No. 27. The central phase of the eclipse occurred at $9^h\ 57^m$ according to both my observations and the Nautical Almanac. The Moon's center was then about 15′ south of the center of the shadow. The photograph therefore represents the Moon while it was most deeply immersed in the shadow.

Following are the times of exposure of all the negatives made during totality September 3, 1895:

$9^h\ 11^m$	to	$9^h\ 17^m$	Standard	Pacific Time.
$9^h\ 24^m$	to	$9^h\ 47^m$	"	"
$9^h\ 57^m$	to	$10^h\ 06^m$	"	"
$10^h\ 14^m$	to	$10^h\ 25^m$	"	"
$10^h\ 30^m$	to	$10^h\ 35^m$	"	"
$10^h\ 39^m$	to	$10^h\ 51^m$	"	"

KENWOOD OBSERVATORY, CHICAGO,
Nov. 21, 1895.

PHOTOGRAPH OF THE NEBULA *N. G. C.* 1499 NEAR THE STAR ξ PERSEI.

By E. E. BARNARD

IN *A. N.* 3082, Dr. Archenhold gives an account of a large nebula which he had photographed near the star ξ Persei. He also gives an outline map of the nebula, showing its position with reference to the stars in and near it.

From his chart, the nebula is shown to extend from R. A. $3^h\ 47^m$ to R. A. $3^h\ 56\frac{1}{2}^m$, and from Dec. $+\ 35°.4$ to $+\ 36°.6$.

This nebula was discovered by me some six years previous to Dr. Archenhold's photograph, *viz.*, 1885, November 3, with the 6-inch Cooke Equatorial of Vanderbilt University Observatory, at Nashville, Tenn. It is No. 1499 of Dreyer's *N. G. C.*, where it is described as "very faint, very large, diffused." It was a very difficult object with the 6-inch.

I have made several photographs of this nebula with the Willard lens of the Lick Observatory. The last one of these was made 1895, September 21, and was given 6 hours' exposure. An enlargement from this is here reproduced (Plate XI). The scale of this picture is $0°.9 = 1$ inch.

It will be seen from the photograph that this is a very remarkable nebula. There are a number of angular condensations in it—especially in the north preceding and north following edges. Indeed the outlines everywhere seem to be brighter and unequally condensed. In its northern part is a very small, very dark spot, about 6′ in diameter—doubtless a hole in the nebula.

It will be noticed that this object lies on the edge of a region comparatively devoid of small stars. This is a very suggestive fact noticeable in the case of most of these large diffused nebulæ, as shown in photographs of the large nebulous regions of Cygnus, Monoceros, Cepheus, Scorpio and the present one of Perseus, where the nebulosity either lies in or on the edges of a vacancy among the stars.

KENWOOD OBSERVATORY, CHICAGO,
November 20, 1895.

PLATE XI

E

S N

W

PHOTOGRAPH OF THE NEBULA *N. G. C.* 1499

By E. E. BARNARD, Lick Observatory

Exposure 6h Sept. 21, 1895 Six-inch Portrait Lens

CELESTIAL PHOTOGRAPHS WITH A "MAGIC LANTERN" LENS.

By E. E. BARNARD.

I HAVE elsewhere (*A. and A.*, December, 1895, *M. N.*, June, 1895), given some account of the performance of a small lens in photographing large areas of the sky, and for the delineation of very large diffused nebulosities, etc. This lens is a very small one belonging to an ordinary "magic lantern:" it is one and one-half inches in diameter and some four or five inches equivalent focus.

Six photographs of various parts of the Milky Way made with this lens are here presented (Plate XII). These will at once show the value of such an instrument for this class of work.

I have made a great number of plates similar to these, of the brighter cloud-regions of the Milky Way, and propose soon to construct a photographic chart from them. The present photographs show six of the most remarkable parts of the Milky Way as seen from this latitude. They run from the Eagle to near the southern horizon in Sagittarius and the Scorpion.

For convenience in arranging these pictures, they do not follow each other in the order of position in the sky.

Fig. 1 (R. A. 18^h 40^m, Dec.—8°, August 16, 1895, exposure 5^h 10^m) shows the great star-cloud near Messier 11 which was first photographed by the writer with the 6-inch Willard lens of the Lick Observatory in the summer of 1889 (see this JOURNAL January, 1895, for a reproduction of one of the photographs of this object with the Willard lens; also the *Photographic Times* for August, 1895, where a splendid reproduction is given).

The present picture with the lantern lens shows this magnificent star-cloud on a scale scarcely different from the naked eye view of it. It is seen to rather abruptly project over a vacant

part of the Milky Way to the west. The connection of this region with that in Fig. 4 is easily made out.

Fig. 2 (R. A. $17^h\ 56^m$, Dec. — 28°, August 23, 1895, exposure $1^h\ 10^m$), shows the great star-clouds of Sagittarius—just east and north of the tail of the Scorpion. The bright spot in the upper part of this plate is the nebula Messier 8. This portion of the Milky Way was the first that I succeeded in photographing in 1889. (For a reproduction of this region with the Willard lens see Proctor's *Old and New Astronomy*.) The picture with the larger lens shows a great amount of very curious structural detail.

Fig. 3 (R. A. $19^h\ 20^m$, Dec. + 8°, August 17, 1895, exposure $2^h\ 45^m$). This is the region near Altair (the bright star to the left of the center of the picture). It joins that of Fig. 1 to the northeast. The smallest of the cloud-forms in this plate somewhat resembles the great cloud near Messier 11.

Fig. 4 (R.A. $18^h\ 0^m$, Dec. — 19°, June 19, 1895, exposure $2^h\ 55^m$). This picture shows the remarkable star-cloud in Sagittarius lying between the Trifid nebula and the Swan or Omega nebula. The two small, sharply defined holes near the middle of this cloud are the most striking features about it, except the dark lanes and star streams in its southern part, which are not well shown here on account of the smallness of the scale. For pictures of this region with the Willard lens see Miss Clerke's admirable *History of Astronomy during the Nineteenth Century*, and the *Photographic Times* for August, 1895.

Fig. 5 (R. A. $17^h\ 40^m$, Dec. — 23°, June 26, 1895, exposure $4^h\ 05^m$). This shows the singular region between the Trifid nebula and the star Theta Ophiuchi. The center of the picture is occupied by small cloud-forms, which, in a picture made with the Willard lens, appear to be nebulous. A vacant region is seen passing around to the left and below the star Theta Ophiuchi in the lower right-hand corner of the picture—this has its origin in Fig. 6. This remarkable structure of the Milky Way about Theta Ophiuchi is shown in a photograph with the Willard lens in *Knowledge*, November, 1894, and in the *Photographic Times* for August, 1895.

PLATE XII

N

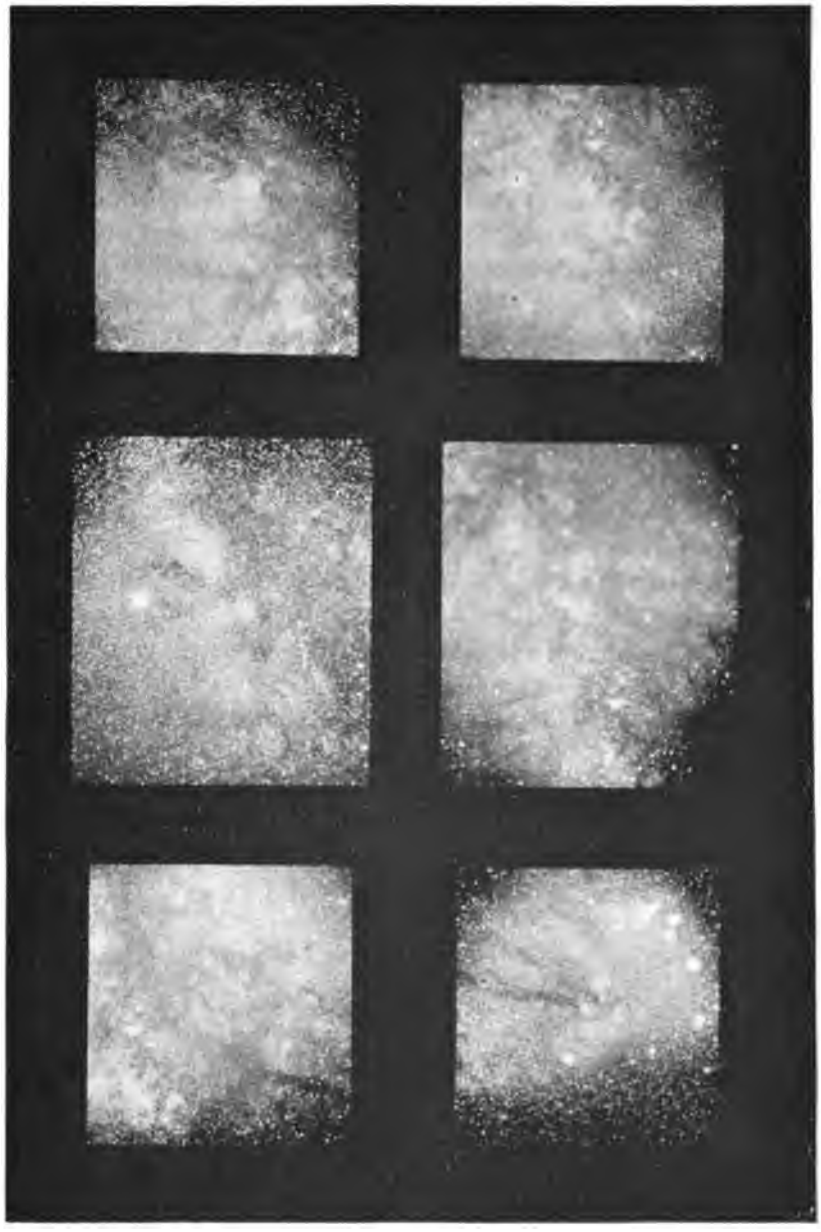

S

PHOTOGRAPHS OF THE MILKY WAY

Made with a 1½-inch Magic Lantern Lens

By E. E. BARNARD, Lick Observatory

1895

Fig. 6 (R. A. $16^h\ 20^m$, Dec. $-23°$, March 30, 1895, exposure $2^h\ 18^m$), shows the new nebulous region about Antares. This remarkable region was first shown on a photograph with the Willard lens March 23, 1895, at which time its nebulous character was first made manifest (see *A. N.* No. 3301; *M. N.* June, 1895).

The present picture shows two remarkable vacant streams running eastward from the great nebula about Rho Ophiuchi. The upper one of these vacant lanes is the one shown in Fig. 5, which passes easterly and southwesterly of Theta Ophiuchi. A large, long nebula will be seen about the star Nu Scorpii in the upper right-hand part of this picture; this object is very remarkable, as shown on a plate with the Willard lens. It was discovered with the lantern lens.

The scale of all these pictures is about 10° to one inch. The exposures in making them, it will be seen, are rather long; such long exposures are unnecessary. The small camera was fastened to the Willard box and usually given the same exposure as with the large lens. For instance, the great star cloud near Messier 11 is well shown in from ten to fifteen minutes.

In conclusion, I think these six photographs with the small lens show us in a most striking manner how the most valuable and important information may be obtained with the simplest means.

KENWOOD OBSERVATORY, CHICAGO,
November 18, 1895.

STARS HAVING PECULIAR SPECTRA.

EIGHT NEW VARIABLE STARS IN CETUS, VELA, CENTAURUS, LUPUS, SCORPIO, AQUILA AND PEGASUS.[1]

By M. FLEMING.

AN examination of the Draper Memorial photographs received during the past summer from the Arequipa Station has added several stars to the lists of those already known to have peculiar spectra. The objects are contained in the following table, which gives the designation of the star, the approximate right ascension and declination for 1900, the catalogue magnitude and a brief description of the photographic spectrum.

Designation	R. A. 1900	Dec. 1900	Magnitude	Description
B. D.—1° 2312	$9^h\ 45^m.9$	− 1° 33′	8.9	Type IV
Z. C. 13^h 717	13 13 .4	−73 55	8½	Type IV
A. G. C. 19416	14 15 .7	−49 24	8½	Type IV
Z. C. 17^h 921	17 15 .3	−41 39	8½	Peculiar
....	18 7 .8	−19 5	...	Type V
C. D. M.—30° 15469	18 9 .7	−30 54	10	Type V

—Lupi. *A.G.C.* 19416. In using the photographic chart plates to identify this fourth type star, Miss L. D. Wells discovered distinct evidence of its variability. A further examination of photographic charts taken on May 24, June 13, June 13, July 2, July 4, July 9, July 9, 1889; April 20, May 22, May 28, 1890; May 21, May 21, May 27, May 27, 1891; May 14, May 16, May 18, August 10, August 13, 1892; April 28, April 28, May 1, May 10, May 15, June 3, June 23, June 23, June 26, 1893; April 14, April 14, May 21, May 22, July 26, 1894; March 12, March 12, April 8, April 15, and April 16, 1895, gave the magnitudes 11.2, 10.9, 11.2, 11.2, <9.9, 11.2, 11.2; <8.7, 10.9, 11.1; 10.9, 10.9,

[1] Communicated by Edward C. Pickering, Director of the Harvard College Observatory.

11.0, 11.2; 11.2, 10.6, <10.4, <10.0, <9.9; 10.8, 11.0, 10.6, <9.6, <10.0, 11.1, 10.8, 11.0, 11.2; 10.8, 10.6, 10.6, 10.8, 9.6?; 10.3, 10.4, 10.4, 9.2, and 9.8 respectively, thus confirming the variability of this star.

C. D. M. −30° 15469. The presence of the bright lines $H\beta$, $H\gamma$, $H\delta$, $H\epsilon$, and $H\zeta$ in the photographic spectrum of this star was discovered by Professor James E. Keeler, at this Observatory, on October 18, 1895. This star is of interest since its photographic spectrum closely resembles that of η Carinae.

In addition to the objects described above, six stars having spectra of the third type, and also bright hydrogen lines, have been proved to be variable. The following table contains the constellation, designation, approximate right ascension and declination for 1900, the number of plates examined and the maximum and minimum magnitude as derived from the photographs.

Constellation	Designation	R. A. 1900	Dec. 1900	No. Plates	Magnitude Max.	Min.
Vela	*C.D.M.*−41° 6787	11h 44m.1	−41° 12	27	7.8	12.4
Centaurus	*Z. C.* 11h 3351	11 50 .0	−58 42	55	8.6	13.0
Centaurus	*A. G. C.* 19643	14 25 .1	−29 39	26	7.7	8.8
Scorpio	.....	17 8 .3	−33 19	68	9.4	14.1
Aquila	.....	19 53 .7	− 8 10	52	10.0	<12.4
Pegasus	*B. D.* +5° 4928	21 56 .1	+ 5 39	41	8.2	<13.0

—Velorum. *C.D.M.* −41° 6787 The magnitudes of this star, as derived from photographs taken on May 25, June 1, June 13, 1889; April 1, May 11, May 14, May 25, May 28, 1890; June 23, July 2, July 3, 1892; April 28, May 1, May 1, May 5, May 8, June 27, June 27, 1893; April 9, May 19, June 18, June 18, 1894; Feb. 20, April 26, May 1, May 21 and June 4, 1895, are 8.1, 7.8, 8.4; 8.2, <8.9, 8.4, 9.2, 9.1; <9.6, <9.6, <9.6; 12.4, <11.9, 12.4, <10.2, <9.8, 11.2, 11.2; 11.6, 11.2, 9.7, 9.6; <10.4, <9.4, 9.3, 9.2, and 8.2 respectively.

—Centauri. *Z. C.* 11h 3351. The magnitudes of this star, as derived from photographs taken on May 20, May 27, May 31, June 13, June 13, 1889; April 3, April 13, May 5, May 9, May 26, 1890; May 3, 1891; March 18, August 5, August 7, August

12, 1892; January 13, January 13, January 13, February 25, April 6, April 28, May 2, May 2, May 2, May 2, May 4, May 4, May 4, May 4, May 12, May 16, May 20, June 22, June 26, June 26, 1893; April 17, May 15, May 15, May 17, May 23, June 1, June 1, June 1, June 1, 1894; March 26, April 3, April 3, April 10, April 11, April 14, April 21, May 9, June 4, June 14, and June 15, 1895, are 9.2, 9.5, 10.0, 10.9, 10.8; <11.3, <9.0, 11.5, 11.4, 10.2; <9.1; 10.2, <8.6, <9.8, <9.8; <9.7, <11.6, <11.4, <9.0, 8.6, 10.7, 10.8, 10.9, 10.9, 11.0, 10.8, <10.9, 11.0, 11.0, <9.7, <10.6, 11.3, <11.9, 12.4, 12.6; 10.8, 9.4, 9.5, 9.5, <9.1, 9.8, 9.8, 9.8, 9.8; <10.8, <11.7, <12.2, 13.0, 12.9, <10.4, <10.4, 11.4, 9.6, 9.2, and 8.8 respectively.

—Centauri. *A. G. C.* 19643. The magnitudes of this star, as derived from photographs taken on June 3, June 13, June 13, June 21, June 25, July 1, August 1, 1889; April 14, May 13, May 15, May 29, June 7, June 23, 1890; May 27, June 27, 1891; April 23, April 23, 1892; May 31, June 3, June 3, June 5, 1893; June 19, July 5, July 6, 1894; March 12 and April 19, 1895, are 8.8, 8.3, 8.4, 8.7, <7.8, 7.7, 8.1; 8.4, <8.6, <8.7, 8.2, 8.2, 8.2; 8.8, 8.0; 7.8, 7.8; 8.0, 8.2, 8.1, 8.2; 7.9, 8.1, 8.0; 8.8 and 8.8 respectively.

—Scorpii. R. A. $17^h\,8^m.3$; Dec. $-33°\ 19'$. The magnitudes of this star, as derived from photographs taken on June 4, June 27, July 3, July 5, July 13, July 13, 1889; March 25, May 9, May 9, May 10, June 7, June 14, June 21, June 23, September 5, September 6, 1890; May 18, May 18, May 20, May 29, August 3, August 19, 1891; May 17, May 17, June 13, August 10, August 22, October 6, 1892; April 27, April 28, May 7, June 8, June 16, June 16, June 23, July 6, July 6, August 1, 1893; April 26, May 2, May 2, May 14, May 23, May 24, June 14, August 14, August 31, 1894; April 6, April 6, April 29, May 11, May 11, May 11, May 23, June 1, June 1, June 1, June 3, June 14, July 1, July 1, July 1, July 1, July 8, July 8, July 18, August 3, and August 3, 1895, are <9.2, <9.3, 13.4, 13.5,<13.4, <12.9; 11.0, <10.3, <9.8, <9.4, 12.2, 12.2, 12.8, 12.5, 14.1, <13.1; 11.6, 11.6, 11.5, <10.5, <9.2, <9.3; 10.6, 10.6, 11.4, <10.3, <9.7, <12.4; 11.4, 11.3,

11.2, <10.5, <9.4, <10.3, 11.6, <9.2, <10.5, <12.1; 12.1, <11.8, <9.3, 11.5, 11.4, <10.3, 11.4, 12.4, <10.4; <13.4, <13.3, <9.6, 10.3, 10.3, 10.4, 9.8, 9.4, 9.5, 9.6, 9.4, 9.7, 9.9, 9.8, 9.9, 9.8, 10.3, 10.1, 10.4, 10.6, and 10.7 respectively.

—Aquilae. R. A. $19^h\ 53^m.7$; Dec. $-8°\ 10'$. The magnitudes of this star, as derived from photographs taken on November 3, November 7, 1888; August 3, August 4, August 30, September 19, 1890; May 17, May 19, June 2, June 2, June 5, August 1, August 19, September 10, 1891; April 3, May 17, May 17, June 29, July 27, August 19, August 23, September 6, September 12, September 16, September 18, September 26, September 27, 1892; July 21, July 22, July 22, August 3, August 4, August 10, August 15, August 17, September 2, September 13, September 20, October 20, October 20, 1893; June 8, June 13, June 14, August 18, August 28, October 15, November 1, 1894; May 24, June 1, June 3, June 4, and June 11, 1895, are 10.6, 10.8; <11.2, <10.5, <11.1, <8.9; <11.6, <10.9, <10.5, <11.1; <9.2, <10.7, <10.6, <11.1; <10.5, <12.4, <11.6, <8.7, <11.7, <9.2, <9.1, <11.6, <11.0, <11.1, <9.2, <11.2, <12.1; <12.3, <12.3, <11.0, <11.2, <11.5, <11.3, <9.8, <9.2, 11.9, <11.5, 11.8, <12.2, <11.1; <9.6, <11.3, <10.1, <11.0, <10.3, <10.7, <9.1; 10.1, 10.0, 10.0, 10.0, and 10.2, respectively.

—Pegasi. *B. D.* $+5°$ 4928. The magnitudes of this star, as derived from photographs taken on November 18, 1889; June 30, August 25, 1890; June 13, June 13, June 19, August 1, August 24, September 4, September 20, October 1, October 3, October 8, October 14, October 16, October 20, October 21, 1891; September 7, September 8, September 10, September 11, September 18, September 27, September 29, September 30, October 8, October 10, October 13, October 22, 1892; July 24, August 17, September 20, September 29, September 29, October 25, November 2, 1893; May 21, October 5, November 13, November 16, 1894; and June 1, 1895, are <12.8; 9.0, 12.2; 12.0, 12.2, 12.4, <11.4, <10.5, <12.0, <11.6, <11.0, <9.2, <10.9, <13.0, <12.6, 12.8, <11.0; <12.8, <12.9, <13.0, <12.4, <13.0, <12.7, <12.5, 12.8, <11.8, <12.1, 11.8?, 11.8;

<12.1, <10.1, <10.2, <9.7, <9.6, 10.0, 10.0; <13.0, <8.5, 12.8, <12.5; and 8.2, respectively.

In the Wolsingham Observatory Circular, No. 42, issued July 15, 1895, the Rev. T. E. Espin announces the probable variability of a star in R. A. $19^h\ 52^m.4$; Dec. $-2°\ 11'$ (1900). On September 13, 1895, a star nearly in this position was discovered independently here, by means of its photographic spectrum, and its variability confirmed from photographic plates. The magnitudes of this star, as derived from photographs taken on August 23, October 18, 1888; August 4, August 5, August 30, September 30, 1890; May 19, May 19, June 2, June 2, September 2, September 17, 1891; April 3, May 17, May 17, June 29, August 23, September 1, September 5, September 18, September 27, 1892; July 20, July 20, July 20, July 21, July 21, August 10, August 10, August 15, August 15, September 2, October 2, October 9, October 20, October 20, 1893; June 29, July 21, August 10, 1894; May 24, and July 2, 1895, are <12.2, 9.8; <11.6, <11.7, <12.2, 12.1?; <9.4, <12.0, <11.5, <11.2, <10.9, <11.9; 9.2, 9.9, 10.1, <8.7, <8.9, <12.3, <11.2, <9.2, <12.2; <11.7, <10.4, <11.2, 11.8, 11.8, <10.9, <10.1, <9.7, <10.2, <10.9, <9.8, <11.3, <11.9, <12.2; 10.9, 11.2, 11.6; 8.4, and 8.6, respectively.

— Cetus. *B. D.* $-1°$ 475. The variability of this star, whose approximate position for 1900 is in R. A. $3^h\ 14^m.3$; Dec. $-1°\ 26'$, was discovered by Miss L. D. Wells, from a comparison of photographic charts. The magnitudes, as derived from photographs taken on September 6, October 17, 1888; December 19, December 23, 1889; January 4, January 9, January 14, December 28, 1890; March 11, September 17, September 17, September 20, November 25, December 1, December 8, December 10, December 18, 1891; January 5, October 5, December 16, December 23, December 24, December 28, 1892; September 17, September 20, September 20, October 4, October 5, October 6, November 10, November 26, 1893; January 23, July 16, August 16, November 16, November 16, 1894; January 19, August 6, and October 10, 1895, are <10.4, 11.6; 9.8, 9.6; 10.0, 9.7, 9.9, 10.1; <10.5, 10.8,

10.6, 11.0, <10.6, <10.6, 10.4, 10.2, 10.0; 9.7, 11.4, 11.7?, 10.3, 11.7?, 10.2; 10.2, 10.0, 10.4, <10.3, <10.4, <10.0, <9.9, <12.5; 9.7, 9.9, 9.3, 12.2, 12.3; 9.6, 9.4, and 12.4, respectively.

In the ASTROPHYSICAL JOURNAL, **2**, 198, the star *S. D.* $-7°$ 2873, in the table, is given in the constellation Hydra (following Heis). The constellation should be Sextans, as given in the notes, p. 200.

November 19, 1895.

PRELIMINARY TABLE OF SOLAR SPECTRUM WAVE-LENGTHS. X.

By HENRY A. ROWLAND.

Wave-length	Substance	Intensity and Character	Wave-length	Substance	Intensity and Character
5669.258		1	5680.470		00
5669.464		0000 N d?	5680.769	A?	0000
5669.962		0	5680.978	A	000
5670.163	Ni	0	5681.292		000
5670.364		0000	5681.462		000
5670.569	A	000	5681.747		0000
5671.071	V	0	5681.965	A	00
5671.285		0000 N	5682.031	A?	0000
5671.712		00 N	5682.427		2
5672.047	Sc	0	5682.718		000
5672.485		0000 N	5682.869 s	Na	5
5673.022		0000	5683.230		000 N
5673 272		0000	5683.696	-, A?	000
5673.634		000 N	5683.989	A	000
5674.198	A	0000	5684.098	A	0
5674.387		0000	5684.118		0000
5674.496	A	0000	5684.415		1
5674.835		0000 N	5684.710	Si	3
5675.305		0000 N	5684.950		0000 N
5675.647 s	Ti	2 N	5685.250	A?	0000
5675.946		000 N d?	5685.657	-, A	00 d
5676.568		0000	5685.996	A?	000
5677.007	A	000	5686.100		000
5677.175		0000	5686.371		0000
5677.680		0000	5686.429		0
5677.919		00	5686.580		000
5678.277		0000	5686.757	Fe	3
5678.621		000	5687.063		000
5678.830		000	5687.192		0000
5679.025	-, A?	0000 N	5687.697	-, A	0
5679.249 s	Fe	3	5687.834	A?	000
5679.501		0000 N	5688.436 s	Na	6
5679.821	A	0000 N	5688.759		0000
5680.149		000	5688.810	A	00

What is known as the "low sun band" begins at λ 5670 and extends nearly to the "rain-band" at λ 5860. Its existence is supposed to be due mostly to some dry gas in the Earth's atmosphere. There are, however, probably water-vapor lines scattered through this region; and some of the lines are known to be due to oxygen.

The "rain-band" begins at λ 5860 and extends to λ 6030.

Wave-length	Substance	Intensity and Character	Wave-length	Substance	Intensity and Character
5689.255	A?	0000	5702.876	Ti	000
5689.694	Ti	0	5703.012	A	0000
5689.812	A?	0	5703.136		000
5690.117	A	000	5703.308		0000
5690.286		0000	5703.438	A	000
5690.447	-, A	000	5703.591		0000
5690.646	Si	3	5703.797	V	1
5691.715	Fe	2	5703.915		000
5691.919		00	5704.427	A?	000
5692.641	A	1	5704.608		0000
5692.970	A?	{ 000	5704.729	A?	0000
5693.095		{ 000	5704.960	A	0
5693.330		0000	5705.282	A?	0000 N
5693.547		000 N	5705.525	A?	0000
5693.865	Fe	3	5705.688	Fe	1
5694.379	A?	000	5706.215	Fe	3
5694.962	Cr	0	5706.329		0
5695.207	Ni	2	5706.941		00 N
5695.456	A?	0000	5707.204	V	0
5696.160	A	00	5707.265	Fe	1
5696.320	La	0	5707.462		000
5696.582	A?	000	5707.614		0000
5696.869		0000 N	5707.927		000 N
5697.040	A	00	5708.135		0000 N
5697.614	A?	0000	5708.317	Fe	1
5697.794	A	000	5708.622 s	Si	3 N
5698.047	A?	0000 Nd?	5708.881		0000
5698.242	Fe	0	5709.130		000 N
5698.400	A	0	5709.328		0000
5698.555	Fe, Cr	1	5709.601 s	Fe	5
5698.746	V	1	5709.775 s	Ni	5
5698.910	A	000	5710.005		000
5699.106		0000 N	5710.144		00
5699.530	A	0	5711.016	A	000
5699.638		000	5711.313 s	Mg	6
5699.805	A	0000	5711.615	A	000 d
5700.402		00	5711.760	A	000
5700.508	Cu?	00	5712.098	Fe	3
5700.738		000	5712.357	Fe	2
5700.938	A	0	5712.620		000
5701.131		0000 Nd?	5712.835	-, A?	000
5701.323	Si	1 N	5712.996	Cr	0
5701.544		0000	5713.436		0000
5701.772 s	Fe	4	5713.670		000
5701.961		0000	5714.120		000
5702.110	A	000 N	5714.276	A	000
5702.228		0000	5714.380	Fe	0
5702.360		0000	5714.620		0000
5702.543	Cr	0	5714.774		00
5702.754		0000	5714.959		000

Wave-length	Substance	Intensity and Character	Wave-length	Substance	Intensity and Character
5715.116		0000	5727.873		00
5715.308 s	Ni-Ti, Fe	5	5728.096		0000 N
5715.540		0000	5728.319		0000 N
5715.689		000	5728.742	A	00
5716.040		000	5729.096	A-	00 d ?
5716.441		0000 N	5729.417		000
5716.671	Ti	00	5729.876	A	0
5717.186	A	000	5730.030	A	00
5717.523		0000	5730.116	A?	0000
5717.723	A	00	5731.075		0 N
5717.918		000	5731.252		000 N
5718.055	Fe	4	5731.437		00
5718.338		000 N	5731.535		00
5718.510	-, A?	000 N	5731.769		000
5719.154	A	00	5731.984 s	Fe	4
5719.208	A?	0000	5732.214		0000
5719.536	A?	0000	5732.335		0000
5719.795	A	1	5732.522		0
5719.931	A	000	5732.790	A	0000
5720.040		00	5732.948		000
5720.275		0000	5733.097		000
5720.568	A?	000	5733.306	A	00 Nd?
5720.666	Ti, A	0	5733.550		0000
5720.933		000	5733.722		0000
5721.115		0	5733.908	A	000
5721.267		0000	5734.106		0000
5721.930		00	5734.262	A?	000
5722.047	A	000	5734.571		0000 N
5722.170	A	0	5734.786		0
5722.397	A	000	5735.790	A	0
5722.721		000 Nd?	5735.923		00
5722.997		0000 N	5736.241		0000 Nd
5723.590	A?	000	5736.858		0000
5723.756		0000	5737.288		0
5723.885		000	5737.530	A?	000
5723.989		000	5737.688		0000
5724.107	A	0	5737.910	A, Mn	1
5724.313		000	5738.453		0
5724.683		00	5738.693	A?	000
5725.224		0000	5738.767		000
5725.517		0000	5739.084		0000 N
5725.880		000	5739.275	A?	000
5726.168	-, A?	000 Nd?	5739.458		0000
5726.519		0000	5739.698		0
5726.701		0000	5739.873		000
5726.918	A	000	5740.020	A?	000
5727.097	A	0	5740.195		0
5727.271	Ti-V	2 N	5740.369		0000
5727.505		0000 N	5740.582	A?	0000
5727.682		000 N	5740.825		0000 N

Wave-length	Substance	Intensity and Character	Wave-length	Substance	Intensity and Character
5741.088	A?	000	5754.308		000
5741.432	A?	000	5754.450	A-	0
5741.715	A?	000 N	5754.623	Fe	0
5741.927		0000	5754.881 s	Ni	5
5742.068 s	Fe	2	5755.133		000 N
5742.293		000	5755.370	A	000 N
5742.420	A	0	5755.585	A	000 N
5742.785	A,-	000 N	5755.701	A	000
5743.025		0000	5755.970	A	000
5743.182		0	5756.182	A	000
5743.410		00 Nd?	5756.410	A?	0000
5743.645		00	5757.037	Fe	2
5743.774	-, A?	00	5757.293	A	000
5743.961	A	000	5758.161	A	000
5744.153		00	5758.493	A	000
5744.416		0000	5758.654	A	000
5744.679		0000	5758.978		000
5744.995	A	000	5759.120	A	000
5745.165	A	00	5759.338	A	000
5745.290	A	000	5759.488		0
5745.491	A	000 N	5759.760		0
5745.706	A	000 N	5760.403		0000
5745.932	A	00	5760.572	Fe	1
5745.997	A	1	5760.748		000
5746.638	A,-	000	5760.914	A?	0000
5747.025	-A	000 Nd?	5761.052	Ni	2
5747.502	A	000	5761.305		000
5747.890		1	5761.485	-, A?	000
5748.075		000	5761.637		0000
5748.176	Fe	2	5761.800	A-	0
5748.380		000 Nd?	5762.062		0000
5748.576	Ni	2	5762.479	Ti	000 Nd?
5748.737		0000	5762.635	Fe	1
5748.941		0000	5762.840	A-	00 N
5749.110		000	5763.058		0
5749.513		00	5763.218 s	Fe	6
5749.850		000	5763.460	A	000
5750.270	A,-	000 N	5763.625	A,-	00
5750.427		0000	5766.080	A?	000
5750.723	A	000	5766.485	-A?	000
5750.852		0000	5766.550	Ti	0
5751.357		0000	5766.808		0000
5752.018	A	000 N	5767.358	A	0
5752.254 s	Fe	4	5768.225	A	000 N
5752.459	-A?	000 Nd?	5768.575	A	000 N
5753.105	A	000 N	5769.120		000 N
5753.344 s	Fe	5	5769.295	A,-	000
5753.610		000 N	5769.547		0
5753.860	-Cr	1 N	5769.692		0000
5754.193	A?	000 N	5769.900	A	0000

Wave-length	Substance	Intensity and Character	Wave-length	Substance	Intensity and Character
5770.405	A	oo N	5782.313 } s		3
5770.714	A-	ooo Nd?	5782.390 }	Cu?	3
5771.008	A	oooo	5782.582		ooo N
5771.382	A	ooo	5782.815		ooo N
5771.595	A	ooo	5783.078		ooo N
5771.820		oo	5783.288	Cr	2
5772.040		oooo Nd?	5783.463		ooo
5772.364 s	Si	3	5783.697		oooo N
5772.630		ooo	5783.888		oooo
5772.800	A	ooo	5784.080 s	Cr	3
5772.889		oooo	5784.268		ooo N
5773.155	A	oo	5784.605		ooo N
5773.363	A	oo	5784.879	Fe	1
5773.718	A-	ooo N	5785.036		ooo
5773.982		oooo N	5785.188	Cr	2
5774.250	Ti, A	o	5785.498	Fe	3
5774.457	A,-	oo N	5785.772		oo N
5774.761		oooo N	5785.952	Cr	1
5775.020		oooo N	5786.193	Ti, Cr	o N
5775.304 s	Fe	4	5786.373		ooo
5775.521		oooo	5786.747		ooo Nd?
5775.833		oooo	5786.964		oooo N
5775.969	A	oooo	5787.235	Cr	oo
5776.292	A	ooo	5787.488		ooo
5776.468	A,-	ooo	5787.941		ooo N
5776.958	A,-	ooo N	5788.141 s	Cr	4
5777.737		ooo N	5788.305	A (O)	ooo
5777.975		ooo	5788.398	A (O)	oo
5778.222		oooo	5788.504	A (O)	ooo
5778.505		oooo	5788.611	Cr, A (O)	oo
5778.677	Fe	1	5788.755	A (O)	o
5778.890	-A	ooo N	5788.865	A?	oooo
5779.025	A?	ooo	5788.990	A (O)	oo
5779.406		oooo	5789.095	A (O)	oo
5779.583	A	ooo	5789.210	A (O)	ooo
5779.778		oooo	5789.418[1]	A (O)	o d
5779.913		ooo	5789.565	A?	oooo
5780.176	A	oooo	5789.700	A (O)	ooo
5780.378	A	ooo	5789.850	A?	oooo
5780.520		ooo	5789.978	A?	oooo
5780.600		o	5790.071	A (O)	o
5780.825	Fe	2	5790.186	A?	oooo
5781.024	Fe	o	5790.313	A (O)	o
5781.130	Cr, Ti	oo	5790.407	-, A (O)	oo
5781.288		oooo	5790.581	A (O)	ooo
5781.400	Cr	o	5790.759	A (O)	ooo
5781.573		oooo	5790.878	A?	ooo
5781.763		oooo	5790.985	A (O)	oo
5781.967	Cr	o	5791.174 } s	Cr	4
5782.138		ooo	5791.243 }	Fe	3

[1] Principal line in the head of the δ group (atmospheric oxygen).

Wave-length	Substance	Intensity and Character	Wave-length	Substance	Intensity and Character
5791.405		000	5803.802		0000 N
5791.485	A (O)	00	5804.045		0000 N
5791.620	A?	0000	5804.254	Fe	1
5791.750	-, A	0	5804.479	Ti	0
5791.974		000	5804.681	Fe	0
5792.140	A (O)	00	5804.996		0000
5792.311	A?	0000	5805.198		0000
5792.405	A?	0000	5805.441 s	Ni	4
5792.829	A?	0000	5805.638		000
5792.984	A (O)	00	5805.840	A (O)	0
5793.005		000	5805.986	La	0
5793.085		0000	5806.261	A?	0000 N
5793.292		3	5806.510	A (O)	0
5793.610	A (O)-	000	5806.747		0000
5793.920	A?	000	5806.950 s	Fe	5
5794.137	Fe	2	5807.172	C?	0000
5794.375		0000 N	5807.309	C?	000
5794.562		0000	5807.465	C?	0000
5794.664		000 N	5807.809		0000 N
5794.839		0000 N	5808.015	A,-	0
5795.086		0000	5808.207		00
5795.212		000	5808.406	A?	0000
5795.508		0000	5808.526	A?	0000
5796.102		000	5808.781	A?	0000 N
5796.304 [1]	Ni, A (O)	0	5809.085	A (O)	00
5796.486		0000	5809.256		0000
5796.635		00	5809.439 s	Fe	4
5796.885		000	5809.670		000 N
5796.985		00	5809.741	A (O)	00
5797.263		0000	5809.830		000 N
5797.497	A?	0000	5810.090		000 N
5797.715	A (O)	00	5811.010		00
5797.815	Ti?	000	5811.823		000 Nd?
5798.077 s		3	5812.139	Fe	0
5798.220	A?-	000	5812.345		0000 N
5798.398 s	Fe, A (O)	4	5812.418		0000
5798.728	A,-	000	5812.616	A (O),-	00
5799.154	A?	0000	5812.719		0000
5799.382	A?	0000	5812.942		0000
5799.730	A?	0000	5813.060		000
5800.055	A	0000	5813.270	A (O),-	00
5800.185	A (O)	00	5813.553		0000 N
5800.443	A-	000 Nd?	5813.884		000
5800.844	-, A (O)	0	5814.228		00
5801.058	A,-	0000	5814.788		0000
5801.483		00 Nd?	5815.030	Fe	1
5801.965	A,-	000 N	5815.246		0000Nd?
5802.546	A?	0000 N	5815.441	Fe	0
5802.885	A (O)	0	5815.663		0000
5803.549	A (O)	0	5815.766		0000

[1] First line in the tail of the δ group (atmospheric oxygen) mixed with a solar line.

Wave-length	Substance	Intensity and Character	Wave-length	Substance	Intensity and Character
5815.870		00	5834.440	A (O)?	0000
5816.086		000	5834.756		000
5816.289		0	5835.070	-, A (O)?	0000 N
5816.481	-, A (O)	00	5835.325		0
5816.601 s	Fe	5	5835.475		000
5816.845		0000Nd?	5835.645		00
5817.057	A (O), Mn?	00	5835.800		000
5817.299		0	5836.360		0000 N
5817.593		0000	5836.990		000
5817.708		000	5837.425		000
5819.517		0000	5837.925	Fe	0
5819.779		0000 N	5838.225		000
5820.145		00	5838.378		00
5820.510	A (O)	000	5838.592	Fe	1
5821.110	A (O)	000	5838.770	A	000
5822.107		00 N	5838.896		00
5822.680		00 N	5839.154	-, A	0000
5823.079		000	5839.600	A	000
5823.388		000	5839.823		00
5823.575		0000	5841.050	A	000
5823.910		00	5841.405		000
5824.388		000	5842.600		000
5824.628		00	5842.756	A	00
5824.858	A (O)	000	5843.110		00
5825.511	A (O)	000	5843.438		00
5825.975		00	5843.869	A?	0000
5826.328		0000	5844.057	A?	0000
5826.545		000	5844.405	A?	000
5826.860		000 N	5844.828		00
5827.299		0000	5845.140		00
5827.597		000	5845.509		0
5827.689		00	5845.696	A	000
5827.897	-A	000	5845.965	A?	0000
5828.097		0	5846.185		00
5828.460	A	000	5846.487		00
5828.979		0000 Nd?	5846.789		0000
5829.533	-, A (O)?	0000 N	5847.016		0000
5830.198		0000	5847.221	Ni	1
5830.305	A (O)	000	5847.477		0000
5830.895		000	5847.775		0000Nd?
5831.468	A (?)	0000	5848.105		0000Nd?
5831.821	Ni	1	5848.342	Fe	3
5831.967		000	5848.662		0000
5832.155		000 N	5848.888	A	000
5832.490		000 N	5849.187		000
5832.691		000	5849.415		000
5833.188		0000	5849.909		0
5833.886		0000 N	5850.145		000
5834.145		000	5850.320		000
5834.251		0	5850.553	A	0000

Wave-length	Substance	Intensity and Character	Wave-length	Substance	Intensity and Character
5851.015	A	00 N	5865.027	A	000
5851.210	A	000	5865.109		0000
5851.427		0	5865.633	A (wv)	000
5852.005		0000 N	5865.852	A (wv)	00
5852.223		0000 N	5866.068	A (wv)	000
5852.443	Fe	3	5866.172	A (wv)	000
5852.789		000 N	5866.363	A (wv)	000
5853.378		0	5866.483		000
5853.538		000	5866.675	Ti	3
5853.690		000 N	5866.857		0000
5853.902 s	Ba?	5	5866.959		0000
5854.168	A	0000	5867.221		0000
5854.327	A?	0000	5867.302		00 N
5854.535		0.0	5867.550		000 N
5854.811	A,-	000	5867.785	Ca	2
5855.060	A	000	5868.010		0000
5855.300	Fe	1	5868.132		0000
5855.476		0000	5868.362		0000
5855.567	A?	0000	5868.507		0000
5855.755		0000 Nd?	5868.988	A	00 N
5856.105		0000	5869.320		0000
5856.312	Fe	2	5869.566	A	0000
5856.645		0000 N	5869.888	A	000
5856.838		0000	5870.008	-A (wv)	00
5857.674 s	Ca	8	5870.864	A (wv)	1
5857.976	Ni	3	5871.103		0000
5858.205		000 N	5871.365	A (wv)	000
5858.495		00	5871.523	A (wv), -	0
5858.750		000 N	5872.000	A	000
5859.001		0	5872.247	A	000
5859.215	, A	000 N	5872.427	A	000
5859.463		000	5872.490	A?	0000 N
5859.620		0000	5873.343		0000
5859.809 s	Fe	5	5873.436		1
5860.176		0000	5873.630		0000
5860.306	A?	0000	5873.790	A (wv)	0
5861.331		0	5873.988		00 N
5861.845	A (wv)[1]	0	5874.175	A (wv)	000
5862.021	A	000	5874.697	A?	0000
5862.582 s	Fe	6	5874.865	A (wv)	000
5862.817		0000	5874.995		0000 N
5863.075		000 N	5875.360	A (wv)-	00 N
5863.380	A	000	5875.660	-, A?	0000
5863.685	A	000	5875.815	A (wv)	0
5863.933		0000	5875.985	-, A (wv)	0000 N
5864.167		000	5876.338	A (wv)	1
5864.268		0000	5876.514		00
5864.463		0	5876.664	A (wv)	0
5864.575	A	000	5876.770		0000
5864.742		0000	5877.027		0000

[1] A (wv) stands for an atmospheric line due to water-vapor.

Wave-length	Substance	Intensity and Character	Wave-length	Substance	Intensity and Character
5877.273	A	000	5885.973	A?	0000
5877.547	A (wv)	00	5886.193	A (wv)	5
5877.640		0000 Nd?	5886.390		0000
5877.780	A (wv)	000	5886.560	A (wv)	1
5877.903		0000	5886.620	A (wv)	0
5878.015		0	5886.905	A (wv)	0
5878.245		000 N	5887.045	A	000
5878.504	A	0000	5887.445	A (wv)	5
5878.790		0000 N	5887.690		000
5879.225	A	0000 N	5887.880	A (wv)	3
5879.417	A (wv)	00	5888.056	A (wv)	00
5879.506		0000	5888.404		0000
5879.715		00	5888.655		0000
5879.820	A (wv)	1	5888.920	A (wv)	2
5879.945	A (wv)	1	5889.110		0000
5880.035		0000	5889.303	A (wv)	00
5880.250		0 N	5889.587		0000 N
5880.490		00	5889.855 s	A (wv)	3
5880.649		0000	5890.100[1]	A (wv)	2
5880.725	A (wv)	00	5890.186D_2[2]	Na	30
5880.832		0000	5890.425	A (wv)	0
5880.948	A (wv)	0	5890.529		000
5881.147	A (wv)	1	5890.720		00 Nd?
5881.320	A (wv)	0	5890.950	A (wv)	00 Nd?
5881.500		0	5891.125	A?	0000 Nd?
5881.636	A	000	5891.398	A (wv),-	1
5881.760		0000	5891.581		0000
5881.940		000	5891.720	A (wv)	0
5882.084	A (wv)	1	5891.878	A (wv)	4
5882.203	A (wv)	0	5892.108		000
5882.412	A	0000 N	5892.271	A?	0000
5882.589	A	000	5892.493	A?	0000
5882.708	A	000	5892.608	A (wv)	3
5883.025	A (wv)	0	5892.690		000
5883.218	A (wv)	00	5892.920	Fe	00
5883.285		000	5893.097s	Ni	4 d?
5883.529		0000	5893.268	A (wv)	0
5883.589	A?	000 N	5893.455		000
5883.655		0000 N	5893.725	A (wv)	1
5883.790		0000 N	5894.050	A?	0000
5884.028 } s	Fe	4	5894.360	A?	0000
5884.120 }	A (wv)	5	5894.605	A (wv)	0
5884.245		0000	5894.820	A (wv)	0000 N
5884.410	A (wv)	0	5895.162	A (wv)	0
5884.655		000	5895.360	A (wv)	0
5884.960	A	000	5895.582		0000
5885.278		00	5895.901		00 N
5885.596		000	5896.155	Na	20
5885.733	A (wv)	000	5896.35D_1[3]		00 N
5885.840	A (wv)	00	5896.506		000

[1] This line is coincident with the edge of D_2 toward the violet and is therefore very difficult to see.

[2] The width of D_2 is 0.175.

[3] The width of D_1 is 0.160.

Wave-length	Substance	Intensity and Character	Wave-length	Substance	Intensity and Character
5896.635	A (wv)	0	5905.148		0000
5896.710	A (wv)	1	5905.335	A (wv)	00
5896.857		0000	5905.505	A (wv)	0
5897.047	A (wv)	2	5905.583	A (wv)	00
5897.300	A (wv)	00	5905.652		0000
5897.400		0000	5905.745	A?	0000
5897.470		00	5905.895 s	Fe	4
5897.677	A (wv)	0	5906.130	A?	0000Nd?
5897.750		000	5906.390	A (wv)	000
5897.970	A (wv)	00	5906.505	A (wv)	000
5898.160	A (wv)	00	5906.733		000
5898.378 } s	A (wv)	4	5906.864		0000
5898.430 }		00	5907.060		0
5898.615	A (wv)	000	5907.220	A (wv)	00
5898.745		0000	5907.475	A (wv)	0
5898.980	A (wv)	00	5907.574	A (wv)	000
5899.011	A?	0000	5907.692	A (wv)	00
5899.215	A (wv)	2	5907.873		0000
5899.315		0000	5908.070	A (wv),-	1
5899.518	Ti	1	5908.258	A?	0000
5899.752	A (wv)	00	5908.425	A (wv)	1
5899.887		000	5908.640	A?	0000
5900.135	A (wv)	2	5908.795	A?	0000
5900.260	A (wv)	4	5908.945		0000
5900.585	A?	0000	5909.020		0000
5900.648	A (wv)	000	5909.213	A (wv)	3
5900.981	A?	0000	5909.395		0000
5901.140	A (wv)	00	5909.668	A (wv)	00
5901.296	A?	0000	5909.878	A?	0000
5901.465	A (wv)	00	5910.060	A?	0000
5901.682 } s	A (wv)	6	5910.197	Fe	1
5901.745 }		00	5910.398	A (wv)	1
5901.926		0000	5910.528	A (wv)	000
5902.028		0000	5910.700	A (wv)	00
5902.238	A (wv)	000 N	5910.855	A (wv)	00
5902.363	A (wv)	1	5910.987	A (wv)	2
5902.465		000	5911.140	A (wv)	000
5902.694	Fe	0	5911.365		0000
5902.870	A?	0000	5911.435	A (wv)	000
5903.035	A (wv)	000	5911.710	A (wv)	000
5903.334		0000	5911.810	A?	0000
5903.555		00	5912.093	A (wv)	00
5903.748	A (wv)	1	5912.228	A (wv)	00
5903.918	A (wv)	00	5912.345		000
5904.070	A (wv)	00	5912.757	A (wv)	000
5904.160	A (wv)	00	5912.918	A (wv)	0
5904.420	A?	0000	5913.212	A (wv)	3
5904.592	A (wv)	000	5913.358	A?	0000
5904.850	A?	0000	5913.570		0000
5905.050	A?	000	5913.930	A?	000

THE MODERN SPECTROSCOPE. XIV.

FIXED ARM CONCAVE GRATING SPECTROSCOPES.

By F. L. O. WADSWORTH.

THE invention of the concave grating by Professor Rowland in 1881 marks one of the most important steps in the history of spectrometry. The many advantages which this beautiful instrument possesses over all other forms of diffraction spectroscopes is leading naturally to its more and more exclusive use in nearly all classes of work to which such spectroscopes are applicable, with one important exception, *i.e.*, that of astronomical spectroscopy.

This exception is the more surprising since it is in this very class of work that some of the peculiar advantages of the concave grating over the plane grating are most manifest; for example, its astigmatism, which renders the use of a cylindric lens at the eyepiece unnecessary in star work; and the very short focal lengths and large angular apertures which may readily be secured, making it peculiarly adapted to short focus reflectors which are undoubtedly the form of telescope best suited to stellar spectroscopy.

One reason why the plane grating is preferred to the con cave grating for astronomical spectroscopes is, no doubt, that the usual form of mounting for the latter is not well adapted to this work. In the ordinary laboratory use of the instrument nothing can be more simple and satisfactory than the sliding-bar arrangement, originally designed by Rowland, which has since come into almost universal use in the mounting of these instruments. But in an astronomical spectroscope it is important that all parts of the instrument, save the grating table itself, should be fixed in position, not only to secure rigidity for all positions of the telescope, but also to enable the parts to be completely

enclosed and protected from stray light and air currents in the dome. In certain other kinds of work also, notably that with the bolometer, radio-micrometer, and refractometer or Michelson "interferometer," the "fixed arm" form of instrument is essential if the best results, as regards both accuracy and simplicity and convenience, are to be secured. The plane grating is from the very method of its use essentially an instrument of this kind, and the ordinary prism train can easily be converted into one by use of a reflecting mirror in one of the various ways that have been discussed by the writer.[1] But in the case of the concave grating no corresponding arrangement has to my knowledge been proposed.[2]

It was while working on the forms of fixed-arm prism spectroscopes just spoken of that I first considered the problem of obtaining an equivalent form of mounting for the concave grating. The conditions to be fulfilled are the same in both cases, *i.e.*, a fixed position of source (not necessarily however a fixed slit), and a fixed eyepiece, the latter to be always normal to the grating, or at least to the focal plane of the spectrum at the point under examination, in order that all the lines in the field may be in focus at once. The fulfillment of this latter condition involves no difficulty in the case of the prism train or plane grating where the refracted or diffracted rays are always brought to a focus by a view telescope whose direction and focal length remains unchanged. But in the case of the concave grating, the direction of the diffracted ray and the distance of the grating from either the slit or the observing eyepiece must *both* vary for each

[1] "An Improved Form of Littrow Spectroscope." *Phil. Mag.*, July, 1894. "Fixed Arm Spectroscopes." *Phil. Mag.*, Oct., 1894., *A. and A.*, Dec., 1894. "Some New Designs of combined grating and Prismatic Spectroscopes of the Fixed Arm Type." ASTROPHYSICAL JOUR., March, 1895. "A New Multiple Transmission Prism." ASTROPHYSICAL JOUR., Nov., 1895.

[2] The interchange of the usual position of slit and eyepiece in the Rowland mounting, as made by Mr. Lewis in his recent work with the radio-micrometer (see this JOURNAL June, 1895), enables, it is true, the observing instrument to be fixed in position, but this only solves one half the problem, for it would of course be impossible to use this arrangement with a fixed source of light, the Sun or a star, for example.

wave-length, and this double variation introduces additional complexity in a design of a fixed-arm form of mounting for this instrument. I have not yet succeeded in finding as simple and complete solution of this problem as was found in the case of the prism train, although I have designed a large number of forms in which all of the above conditions are fulfilled. On account of the desirability of using the concave grating in the classes of work above referred to I have thought that it might be of interest to describe some of the more promising of these, but I hope that some one may be able to suggest improvements in the direction of greater simplicity and compactness, for I am not fully satisfied in these respects with what I have so far been able to produce.

Let us first consider the possible relations between the radius of curvature of the grating ρ, the distance of the slit from the grating R, and the distance of the focal image from the grating r. The general equation between these quantities is

$$r = \frac{\rho R \cos^2 \theta}{R(\cos\theta + \cos i) - \rho \cos^2 i}, \qquad (1)$$

where i is the angle of incidence and θ the angle of diffraction.

This equation represents, as has been shown by Professor Rowland, a pair of conjugate curves, of which the coördinates are respectively r and θ and R and i. If these last two quantities be fixed, *i. e.*, if we start with a fixed position of the slit and a fixed position of the grating, then we have for r:

$$r = \frac{\rho R \cos^2 \theta}{R\cos\theta + (R - \rho\cos i)\cos i} = \frac{\rho \cos\theta}{1 + \alpha \sec\theta}, \qquad (2)$$

where $\alpha = (1 - \frac{\rho}{R}\cos i)\cos i = \text{Const.}$

To obtain a fixed-arm form in this case we may make use of the arrangement shown in Plate XIII, Figs. 1 and 2. The diffracted ray is received on a doubly reflecting prism or pair of mirrors, A, A', which is carried on an arm B, pivoted at P just below the center of the grating G. From A' the ray returns to a second mirror C, placed just above the grating. This mirror is carried on a table, which rotates on an axis concentric with P, and is connected to the arm B,

PLATE XIII.

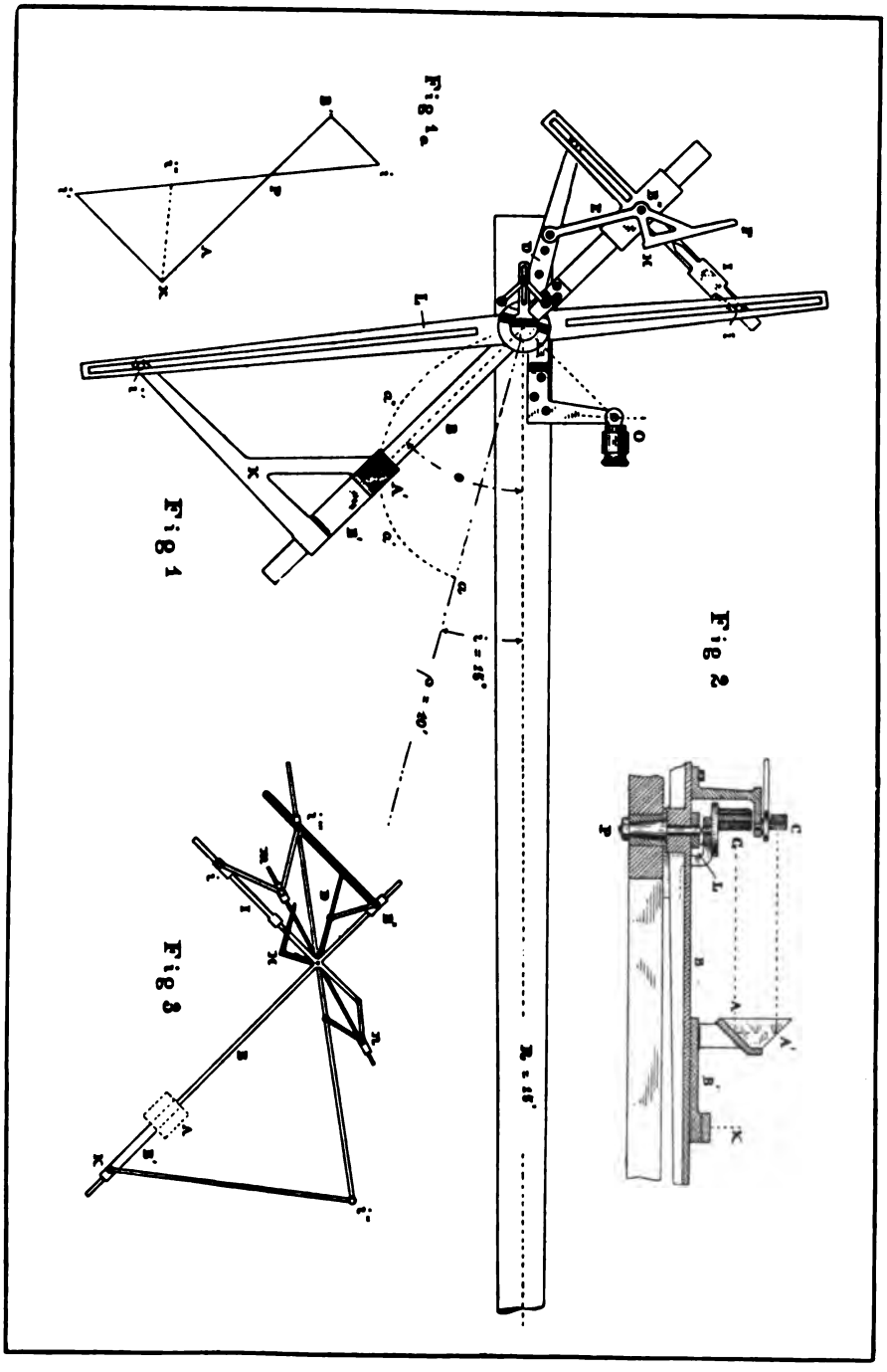

as shown in Fig. 1, by the usual form of minimum deviation device (or better that described on p. 345, *Phil. Mag.*, 1894), so as to move in the same direction as the latter, but at one-half the angular velocity. From C the diffracted ray is therefore reflected in a constant direction, CO, to the observing eye-piece at O. As the angle θ is changed, the distance $GAA'CO$, must be kept equal to r, in order that the spectrum remain in focus at O. To do this we must keep the distance GA equal to a quantity x, which is evidently equal to $\frac{1}{2}[r-(OC+AA')]$,

or
$$x=\tfrac{1}{2}\frac{\rho\cos\theta}{1+\alpha\sec\theta}-\frac{\beta}{2}, \qquad (3)$$

where α and β are constants.

This may be accomplished by mounting the prism AA' on a carriage B' which slides along the arm B. The position which the prism would have to occupy for different values of θ is easily calculated from (3), when we know the values of ρ, R, i and β. In the case of the particular values adopted in Fig. 1 it is shown by the dotted line $aa'a''$. The adjustment of the carriage to this curve might be accomplished automatically by means of a cam of the form $aa'a''$, or by the system of link work shown in Fig. 1 or in Fig. 3. In Fig. 1 D is an arm fixed in position normal to the grating and equal in length to $\frac{1}{10}\rho$. Pivoted to its outer end is a second link E equal to it in length, and having its free end pivoted to a carriage B'', which slides on the arm B. Attached to the outer end of E, and forming part of it is the right-angled bar $B''HF$ of which the side HF is parallel to E, and at a distance $B''H=\alpha=(1-\frac{\rho}{R}\cos i)\cos i$ from its axis. Against this side rests a knife-edge attached to a slide I, which moves on an arm attached to B'' at right angles to B, and on this slide is a pin i placed at unit distance above the knife-edge. Attached to the carriage B', which carries the reflecting prism AA', is another arm K also at right angles to B, and having a second pin i' at a distance equal to 2'.5 from the center line of B. A long link L, pivoted at P, and having two radial slots to receive the two pins i and i', completes the

arrangement. Then if the prism AA' is placed at a distance $AK = \frac{1}{2}\beta = \frac{1}{2}(AA' + OC)$ from the center of K the distance PA will always be equal to x as desired.

For, see (Fig. 1_a),

$$PB'' = \tfrac{1}{2}\rho\cos\theta, \text{ and } B''i = 1 + a\sec\theta,$$

$$\therefore \frac{PK}{2\frac{1}{2}} = \frac{PA + AK}{2\frac{1}{2}} = \frac{\rho\cos\theta}{5(1 + a\sec\theta)},$$

or

$$PK = \tfrac{1}{2}\frac{\rho\cos\theta}{1 + a\sec\theta} \text{ and } PA = x.$$

In the system of link work shown in Fig. 3 we have the same general arrangement of parts as in Fig. 1 save that instead of keeping the side $B''i$ of the right angled triangle $PB''i$, (Fig. 1_a), equal to $1 + a\sec\theta$, we keep the hypothenuse Pi equal to this quantity. This is accomplished by attaching the right angled lever FH not to the end of link E but to the inner end of the fixed link D. The slide I moves on an arm fixed at right angles to B at the center, and its motion is communicated to a second slide i'''' moving on the arm L, by means of the sliding-toggle links shown in the figure. The slide i''' has a pin which engages with a slot cut in an arm extending out from the carriage B'' at right angles to B and the bar PB'' and arm L therefore always form the base and hypothenuse respectively of the corresponding right angled triangle of Fig. 1_a. Hence if we place a pin at i'' on the bar L at a fixed distance $= 2.5$* from P and connect this to the point K on the carriage B' by a link $i''K$ of the same length as $i''P$, the side PK or the distance of the point K on the carriage from the axis of rotation will always be equal to $\frac{1}{2}\frac{\rho\cos\theta}{1 + a\sec\theta}$ as before.

If instead of varying θ and r we vary i and R, we obtain a precisely similar arrangement, in which the slit s and the observing eyepiece O have simply been interchanged. This arrangement is in some respects preferable to the first, because all reflectors are between the slit and the grating, instead of between the

*Since the hypothenuse must always be greater than the side PB'' it is necessary to make the links D and E of such length that $D + E$ is less than $1 + a$. In the figure D and E are therefore $\frac{1}{2}$ as long as in Fig. 1 or are each $\frac{1}{10}\rho$.

latter and the observing eyepiece. A still more important advantage is that we may dispense with the mirror C and place the slit directly over the axis of rotation P. If the illumination were symmetrical about this axis nothing further would be necessary, but usually the light comes from a source S in the fixed direction SC, Plate XIV, Fig. 4. In order that the grating may be filled with light it is necessary that the rays should always fall on the slit from the direction $C's$ coincident in direction with GA, and to secure this the mirror C is placed just at one side of the slit on a frame which rotates on the axis P at one-half the angular speed of the slit arm B. This mirror, therefore, is always in a position to reflect the rays from S to the concave mirror C', which is mounted on the slit arm itself, and which in turn forms an image of the source on the slit plate. Since the rays are not reflected at the axis of rotation, there will be a slight lateral displacement of the image on the slit plate as the arm B revolves, but this may be avoided if objectionable by inserting a collimating lens between S and C, so as to render the beam incident on C parallel.[1] As before AA' must be moved along B as the latter revolves, in order to keep the spectra in focus at O. This may be done automatically by one of the preceding systems of link work, which is omitted from Fig. 4 for the sake of clearness.

Let us now examine the effect of rotating the grating itself on the axis P, all of the other parts of the spectroscope remaining fixed in position, just as in the use of the plane grating. In this case i and θ vary together, and if we call ϕ the fixed angle between the line of collimation Gs and the direction of the diffracted ray GO, we have

$$\theta = \phi - i,$$

and

$$R = \frac{\rho \cos^2(\phi - i)}{\cos(\phi - i) + (1 - \frac{\rho}{r}\cos i)\cos i}$$

$$= \frac{C\cos^2 i + C_1 \sin^2 i + C_2 \sin 2i}{C_3 \cos i + C_4 \sin i - C_5 \cos^2 i} = f(i), \qquad (4)$$

[1] The theory of this mirror mounting has been already discussed in one of the articles above referred to. See *Phil. Mag.*, 38, 342.

where C, C_1, C_2, . . . C_5 are all constants depending for their numerical value on the values of R, ρ, and β.

In this case to keep the spectra in focus as the grating revolves we would have to vary either the distance Gs or GAO, so as to keep it constantly equal to R. We might do this just as before by using a doubly reflecting prism in the path of one of the rays and moving this prism by an amount equal to ½ the change in R. Since both the directions GO and Gs are in this case fixed, no other reflectors are required, and the arrangement becomes in that respect simpler than either of the preceding. We might indeed dispense with all reflections, and simply move the slit S along the line of collimation, for as this remains fixed the direction of the incident light will also remain fixed, and to keep the image of the source on the slit all that is necessary is to attach the condensing or image-forming lens to the same carriage that carries the slit, and move the two together.

This last arrangement could not, of course, be used in case the position of the image is fixed, as in an astronomical spectroscope. In this case, although the arrangement of parts is simpler than in the two preceding cases, the arrangement necessary to keep the distance Go or Gs automatically equal to R would be very complicated if link work were to be used.

The most practical way to secure the required motion of the prism AA' or the slit S would be to attach to the grating a cam of the form $r' = \frac{1}{2}f(i) - \frac{\beta}{2}$, or $R = f(i)$ respectively, the values of $f(i)$ being calculated from (4). Such an arrangement would, of course, only work for one particular set of values of r, ϕ, and β, and in order to avoid making this cam very large it would be necessary to make r considerably greater than ρ and β also large. Such a cam calculated from (4) for the values $\rho = 10$, $r = 15$, $\phi = 15°$, and $\beta = 2$ as before, is shown in Fig. 5.

The preceding solutions are perfectly general in character, *i. e.*, they hold good for all values of R, r, θ, and i. They are, however, of theoretical interest rather than of practical importance on account of the mechanical complexity of the mountings.

PLATE XIV.

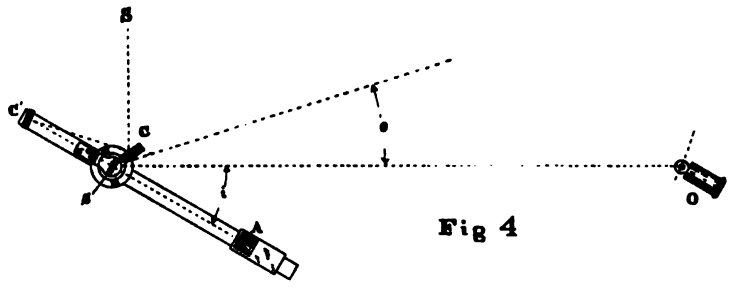

Fig 4

Fig 5

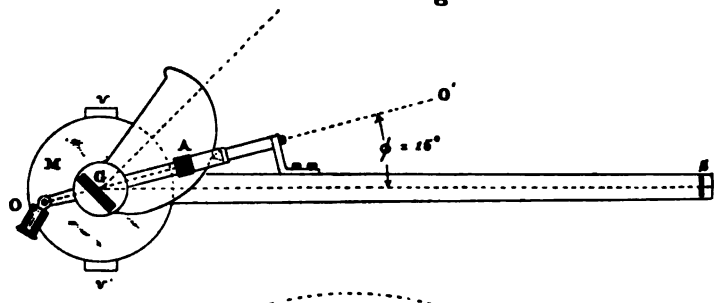

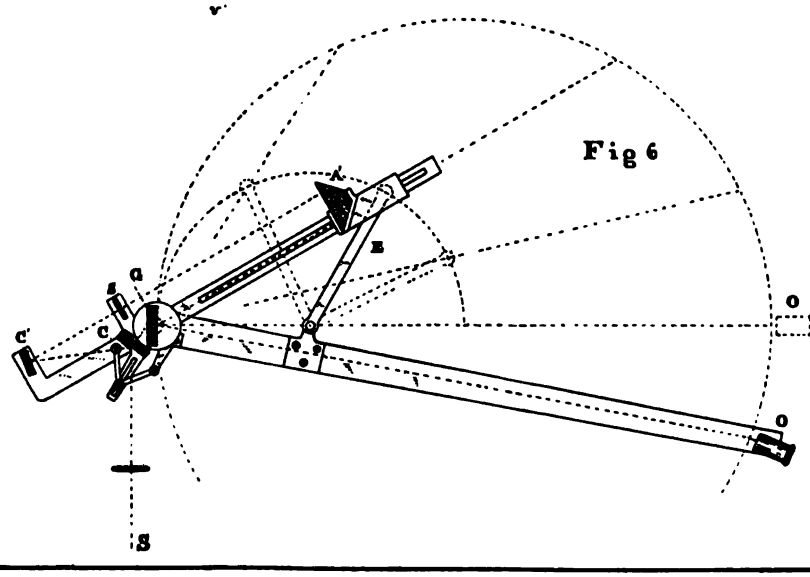

Fig 6

We will now proceed to consider some special solutions which lead us to better mechanical designs. Naturally the most simple relation between r and θ, or R and i, is obtained by making $R = \rho \cos i$, as in Rowland's mounting. Equation (1) then becomes

$$r = \rho \cos \theta,$$

and the spectra lie on the circumference of a circle of a diameter equal to the radius of curvature of the grating. For this special case there are three forms of fixed-arm mountings which correspond to the three general solutions treated above, *i. e.*, those in which the direction of the diffracted ray varies, those in which the direction of the incident rays is varied, and those in which the directions of both incident and diffracted rays are varied together by a rotation of the grating. The first two forms are conjugate and are obtained from each other by simply interchanging the position of the slit and eyepiece. It will, therefore, be necessary to describe only two types of the second class, *i. e.*, those in which the angle of incidence is changed by the virtual or actual movement of the slit. As has already been stated, these forms are generally preferable to those in which the eyepiece or its virtual image is moved. Fig. 6 shows a mounting for this special case corresponding to the general mountings of Figs. 1 and 4. The reflecting prism or pair of mirrors may be placed either in a vertical plane or in a horizontal plane, as shown in this figure, and must be automatically maintained at a distance x from the grating, equal to $\frac{\rho}{2} \cos \theta - \frac{\beta}{2}$, where $\beta = AA' + Gs$, as before.

This is very easily accomplished in this case by a single link E, which is of a length $\frac{\rho}{4}$ and is pivoted at one end to the carriage which carries the reflecting system and at the other on a line normal to the grating and at a distance $\frac{\rho}{4}$ from it. The reflector is then mounted on the carriage at a distance $\frac{\beta}{2} = \frac{1}{2}(AA' + G's)$ from the pivoted end of E, which must move, as is readily seen, in a circle of radius $\frac{\rho}{4}$. This corresponds to a movement

of a virtual image of s on the circumference of a circle of diameter ρ and thus satisfies the conditions for keeping the spectra in focus at O. The eyepiece at O is placed normal to the circumference of the circle at that point and evidently always remains normal to the spectrum. It may, of course, be placed anywhere on the circumference of the circle, but its best position for micrometric or photographic work is diametrically opposite the grating, or at O'. In order to keep the image of a fixed source S always on the slit, a mirror C moving at half the angular velocity of B, and a condensing mirror C', mounted on B, is used as in Fig. 4.

By arranging the mirrors $A\,A'$ in a horizontal instead of a vertical plane, one important advantage is gained, *i. e.*, an angular displacement of the system by reason of want of straightness in the ways on which the carriage slides has no effect upon the direction of the doubly reflected ray, which therefore can always be accurately determined by the angular reading of a divided circle connected to the arm B. But we can do away with all reflectors inside the spectroscope train by mounting the slit s directly on the end of an arm of length $\frac{\rho}{2}$ pivoted not at the center of the grating but at the center of the circle on which the grating and the observing eyepiece lies (see Plate XV, Figs. 7 and 8). In this last the direction of the light is kept right by mounting the slit, the two reflectors C'' C''' and a condensing lens L on a short par B' pivoted on the end of B and kept directed towards the grating by means of a steel cord $b\,b'$ attached to its end and passing over a pulley just under the center of G; the cord being kept taut by means of a heavy weight. To keep the arm more perfectly in balance a second cord $a\,a'$ may be attached to an arm at right angles to B' and led over a pulley diametrically opposite to the first one. The light from the fixed source S is kept directed upon the lens L by means of a mirror C which is placed between the grating and the pulley b' and moved at the required angular speed by the usual minimum deviation link work, the movable arm of which is kept directed by the cord $b\,b'$ as shown. Instead of this arrange-

PLATE XV.

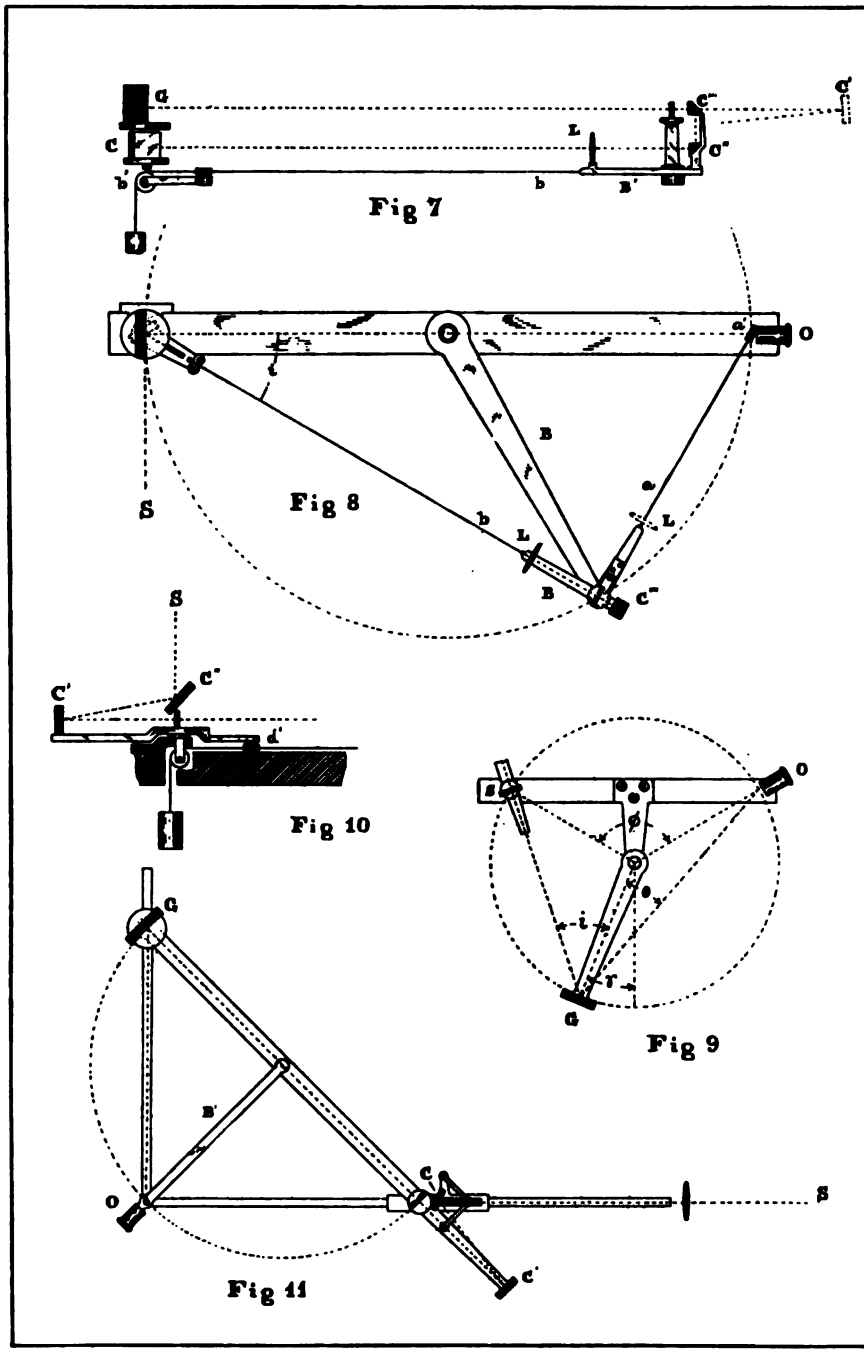

Fig 7

Fig 8

Fig 10

Fig 9

Fig 11

ment we might use a single condensing mirror at C', or equally well a right-angled prism just behind the slit, a condensing lens at L', and a movable mirror just above the pulley a' and just below the eyepiece O.

In the second class of mountings both slit and eyepiece are fixed at two particular points on the circle, and the grating revolves. Here the conditions are best fulfilled not by revolving the grating on its own axis, as in the general solution, but by moving it along the circumference of the circle of diameter ρ. This is accomplished by mounting it normal to a radius arm of length $\frac{\rho}{2}$. The only mechanical problem in this case is to keep the light from the slit automatically directed towards the grating. This may be simply done by an arrangement very similar to that in the preceding figure by mounting the slit and the condensing mirror C', Figs. 9 and 10, on a short arm pivoted just below the slit and kept in line with the grating by a steel cord attached to the latter and passing first between two guide pulleys d' on the end of the arm and then over a pulley mounted in the axis of rotation. The light is kept on the condensing mirror C' by a mirror C mounted at one side of the slit as in Fig. 4; or, by means of a mirror C'' mounted as in Fig. 10 just above the slit and revolving with it. In case the light can be made to come from a direction parallel to the axis of rotation, or conversely, if the axis of rotation can be made parallel to the direction of the light, this same arrangement may be adopted with advantage in any of the preceding mountings, thus dispensing with any minimum deviation movement for the reflecting mirror C.

The relation between wave-length and angle of rotation of the grating arm is in this case very simple.

We have

$$\frac{n\lambda}{s} = (\sin i - \sin \theta).$$

But if we measure the angle of rotation from the position in which the arm is perpendicular to the line joining the slit and eyepiece, *i. e.*, the position in which the central image of the slit

coincides with the cross wire, then, since G, s and O all lie on the circumference of a circle $i+\theta=$ Const.; and if we call ϕ the angle subtended at the center of the circle by the chord sO joining slit and eyepiece, we have

$$i=\tfrac{1}{2}\left(\frac{\phi}{2}+\gamma\right)$$

$$\theta=\tfrac{1}{2}\left(\frac{\phi}{2}-\gamma\right),$$

and

$$\frac{n\lambda}{s}=2\cos\frac{\phi}{4}\sin\frac{\gamma}{2}=\text{Const.}\sin\frac{\gamma}{2}.$$

The range of spectra depends on the value of $2\cos\frac{\phi}{4}$ or on the distance of the slit from the eyepiece, the range becoming greater as ϕ becomes smaller.

A second mounting of this class is shown in Fig. 11. It is similar in general outline to the form adopted by Lewis in the work referred to in a previous footnote. The positions of the slit and eyepiece are simply interchanged in an ordinary Rowland mounting. In order to keep the latter always normal to the spectrum it is mounted on the radius arm B', pivoted at one end at the intersection of the two arms of the mounting and at the other to the middle of the grating bar Gs. The light comes from a source S placed at the end of the track OA and is kept upon the condensing mirror C' by means of a plane mirror C mounted so as to rotate on an axis concentric with the pivot on which the grating arm turns and connected to the latter by the usual form of minimum deviation attachment, as shown.

Of these various forms those shown in Figs. 5, 6, 8 and 11 are perhaps the most satisfactory, from both a mechanical and an optical point of view. The first three general solutions are, as already remarked, of theoretical rather than practical importance.

There is one other form of mounting which, although it does not satisfy all the conditions of a fixed-arm arrangement, is worthy of mention in this connection, both because of its compactness, which enables a concave grating to be mounted in a considerably smaller room than is required with the usual mounting, and because from its form it is very well adapted to astro-

PLATE XVI.

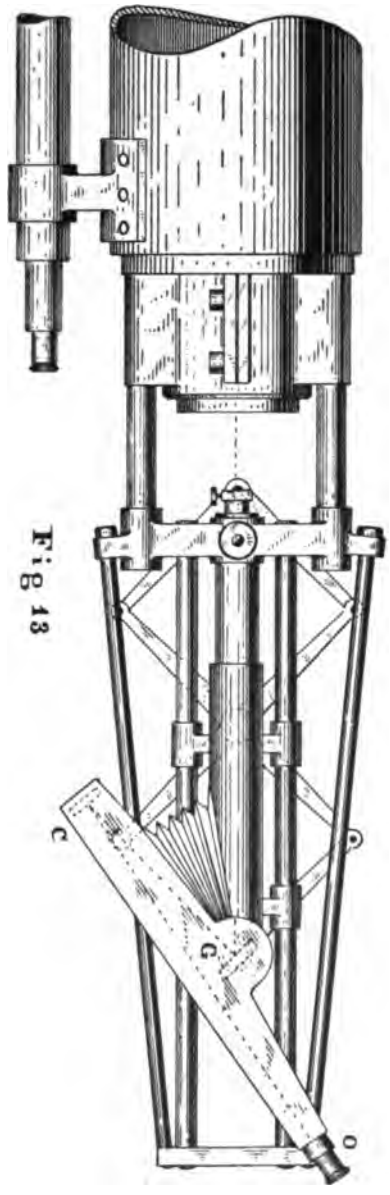

Fig 13

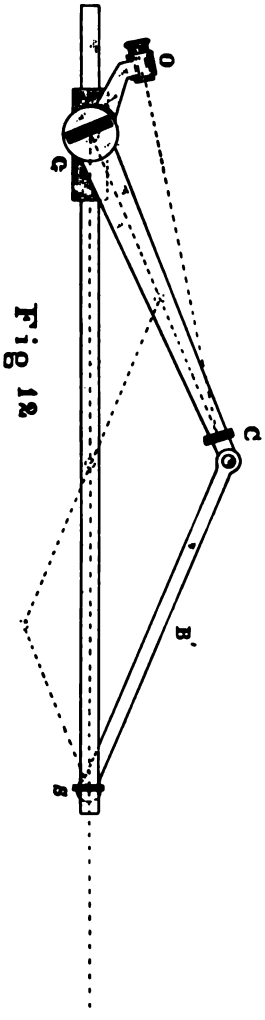

Fig 14

nomical spectroscopes. It is derived directly from the usual Rowland arrangement by adding the radius arm B', as in Fig. 11, and mounting on the grating arm a plane reflector C which returns the diffracted rays to an eyepiece O placed just at one side of the grating and moving with it (see Plate XVI, Fig. 12). The outer half of the grating arm together with the usual eyepiece carriage and track may then be dispensed with. It is evident that, with this arrangement, the slit, grating and observing eyepiece maintain the same relative position to one another as in the ordinary mounting, and that all the spectra may be brought in succession into the field by sliding the grating carriage along the bar Gs. Or the same result may be secured by fixing in position the pivot on which the grating bar turns, and sliding the slit (and an attached condensing lens) along the same bar. In either case the eyepiece is not fixed but travels on the circumference of a small circle, whose center is in the axis of the grating pivot. The range of motion, however, is small and the eyepiece is always in a convenient position for observation. Other advantages of this form of mounting are that the lateral space required is only one-half as great as with the usual form of mounting and, therefore (since the angle rarely needs to exceed 60°), a 21-foot grating may be mounted in a room not more than 22×10 feet; that the grating may be used for smaller values of θ than the usual mounting permits of; and finally, that it may be swung right up to and through the zero position, and the spectra on both sides brought into the field with equal ease without reversing the grating on its mounting. It is also evident that the optical parts may readily be completely enclosed (provided the spectra on one side only are used). The principal disadvantages are the length of the links GC and B' and the fact that both overhang their respective centers. We may, however, easily overcome both of these difficulties, the first by bisecting each of the links GC and B' and pivoting the ends of the short links thus obtained to a third link of length equal to B', but itself pivoted at the center on a slide which moves on Gs (see dotted lines on Fig. 12). It is evident that the relative motion of the grating arm with respect to the slit will be the same as before.

To overcome the second difficulty it is only necessary to place the reflecting mirror C nearer the grating, say at a distance $= \frac{1}{3}\rho$, and then extend the grating arm an equal distance on the other side of its axis to carry the eyepiece or photographic plate, as in Fig. 13.

The advantages just enumerated make this form of mounting particularly well adapted to an astronomical spectroscope, one design for which is shown in Fig. 13. In this the last system of three links between slit and grating are used and, in order to make the motion smoother and more accurate, the system has been doubled, producing the familiar lazy tongs mechanism. The inner end of the link work train is pivoted just under the slit and moves with it as it is adjusted to the focal plane of the telescope, and the outer end is pivoted on the grating axis. This axis carries the grating box GCO, containing the grating, reflecting mirror C and eyepiece or photographic plate at O. The box is connected light tight to the outer half of the collimator tube, to which are secured the ways on which the whole slides to and from the slit. The outer half of the collimator tube is made to slide freely, and yet light tight over the inner (slit) end by means of rings of felt. The range of motion is from $\theta = 10°$, corresponding for a 10,000-grating to wave-length 4400 in the first spectrum, to $\theta = 60°$, corresponding to about wave-length 22,000 in the first, or to about 5500 in the fourth order, a range sufficient for almost any purpose in view. It will be observed that the eyepiece is always clear of the grating track, and in a position favorable for observation with reference to the telescope, and it would be easy to design the mounting so that it might be used either for a concave grating as shown, or, by simply disconnecting the link-work, clamping the grating carriage in position, inserting a collimating lens in the collimator tube and replacing the plane mirror at C by a concave of focal length CO; for a plane grating or fixed-arm prism train similar to one of those shown in Figs. 2, 3, 4 or 5, Plates XII and XIII, of the March number of this JOURNAL.

RYERSON PHYSICAL LABORATORY,
University of Chicago,
November, 1895.

Minor Contributions and Notes.

NOTE ON HELIUM IN BETA LYRÆ.

In a preliminary examination of the Harvard objective-prism plates of β Lyræ, which Professor E. C. Pickering has kindly turned over to me for investigation, one of the striking points noticed is the predominance of helium lines in the spectrum.

Although the wave-lengths have not yet been definitely determined, it seems certain that all of the lines assigned by Runge and Paschen to the so-called "heavier constituent" of helium, within the limits of good definition on the plates, are present in the form of complex bands with bright and dark components. These are, by series, (*a*) λ 3889; (*b*) λ 4472, 4026, 3820; (*c*) λ 4713, 4121, 3868. The most conspicuous groups of bands in the photographic spectrum of β Lyræ are those at $H\zeta$ (λ 3889) and at λ 4472. The remarkable complexity of the first group is now at once explained by the fact that the complex helium group is added to (possibly at times overlapping) the complex hydrogen group ζ. The bands at λ 4026 and λ 3820 are striking, although apparently less complex than those at λ 4472. The lines of the third series (*c*) are not especially prominent, and it is possible that the last one, at λ 3868, does not show bright components.

One peculiar feature of β Lyræ lies in the fact that the bright component lines, both of hydrogen and helium, seem relatively much less intense in the ultra-violet, so that the bright components are very faint, and often invisible in $H\eta$ and $H\theta$, and always invisible (on these plates) in the upper hydrogen lines, although the dark components may be strong.

The so-called "lighter constitutent" of helium is also abundantly represented in β Lyræ. λ 5016 is found on a few plates which extend unusually toward the red, and λ 3965 is probably one of the outlying bands of the complex H group. The lines at λ 4922, 4388 (quite conspicuous), 4144, 4009 seem certainly present; λ 3927 may be an outlying member of the K group, which varies considerably in appearance, and λ 3834 may possibly be combined with $H\eta$; λ 3872 has not been seen. In the third series, λ 4438 does not appear to be present, a fine dark line only having been observed at that point on but one of the

plates thus far examined. λ 4169 is probably present; whether λ 4024 is a part of the group near λ 4026 cannot yet be stated; λ 3936 might possibly complicate the K group, as λ 3838 might affect $H\eta$; λ 3878 seems to be absent.

The remarkable displacements to which most of the lines in the spectrum of β Lyræ are subject makes the determination of the normal wave-lengths of the lines very difficult, but enough is now known to show the predominance of helium in the photographic spectrum, with hydrogen a strong second. Aside from Mg and Ca, the comparatively few other lines present cannot be identified with known elements.

EDWIN B. FROST.

DARTMOUTH COLLEGE,
Nov. 11, 1895.

ON THE WAVE-LENGTH OF THE D_3 LINE IN THE SPECTRUM OF THE CHROMOSPHERE.

IN the November number of the *American Journal of Science* Mr. A. DeForest Palmer has presented the results of a determination of the wave-length of the D_3 line in the spectrum of the chromosphere, made at the Johns Hopkins University in 1893. The spectrometer employed was that previously used by Bell in his investigation on the absolute wave-length of the D lines. The plane grating, having about fourteen thousand lines to the inch on five inches of ruled surface, is mounted at the intersection of the axes of two fixed telescopes, each of $16^{cm}.4$ clear aperture and $2^{m}.5$ focal length. The first order spectrum was used in all the observations, on account of its superior definition. Sunlight was reflected from a Foucault heliostat upon an achromatic lens of about four inches aperture, which formed an image of the Sun about one centimeter in diameter upon the slit. By means of a total reflection prism any part of the limb could be made tangent to the slit. Under these circumstances the D_3 line appeared as a short but very bright line in the center of the field of view. Its definition and intensity were found to vary with the position angle and also with the time of the observation. The best measures were made on very clear days at points in the chromosphere away from prominences. Seven lines selected from Rowland's "Table of Standard Wave-lengths" were used as standards in seventeen series of measurements, each consisting of equal numbers of settings on opposite ends of a solar diameter; the effect of rotation was thus eliminated.

The final value obtained for the wave-length of the D_3 line is given below, together with the wave-lengths of the same line as determined by Rowland and Hale, and those of the bright and faint components of the double line photographed by Runge and Paschen in the spectrum of clèveite gas:

Line	Source	Wave-length	Observer
D_3	Chromosphere	5875.982	Rowland
"	"	5875.939	Palmer
"	"	5875.924	Hale
Double: bright component	Clèveite gas	5875.883	Runge and Paschen
Double: faint component	"	5876.206	Runge and Paschen

There can now be very little doubt that the large values obtained in every case for the wave-length of D_3 in the spectrum of the chromosphere do not exactly represent the center of the bright component, but rather some point between the two lines, as I suggested in a note in the August number of this JOURNAL. The duplicity of the line is not mentioned by Rowland, and Mr. Palmer's note has nothing to say on this point. Both of these observers, however, used a very small image of the Sun, and it is not surprising that the faint component was not seen. With good atmospheric conditions it is an easy object in fairly bright prominences, but in the chromosphere it is seen with difficulty, on account of the increased broadening near the Sun's limb. Under these circumstances settings cannot be made on the center of the bright component, and the presence of the faint component on the lower side of the line tends to increase the measured value of the wave-length. That the results obtained by different observers agree so poorly among themselves can probably be explained by variations in vision, in atmospheric conditions, and in the instruments employed.

As remarked in my previous note, my own results were necessarily based on but few measures, and are to be regarded as preliminary. On account of the bad atmospheric conditions prevailing here during the greater part of the year I can hardly hope to obtain new measures before next summer.

GEORGE E. HALE.

Reviews.

UNTERSUCHUNGEN ÜBER DIE SPECTRA DER HELLEREN STERNE.

PART II (pp. 171–335) of the seventh volume of the Potsdam Publications, containing Scheiner's researches upon the photographic spectra of about fifty of the brightest stars, has been awaited with much interest since the publication, three years ago, of the first part of the volume, devoted to Vogel's spectrographic investigations of the velocities of stars in the sight-line. For that purpose it was necessary to secure spectra as sharp as possible in a very limited region near $H\gamma$, but nevertheless the plates obtained gave adequate definition over a range from about F nearly to H (a length of about 70^{mm}) for precise quantitative and qualitative examination, hence Part II is in the nature of a valuable by-product in the researches on sight-line velocities. The plates were taken in the period from the autumn of 1888 to the spring of 1891.

The spectrographic method, as devised by Vogel, was described at length in Part I and elsewhere, and indeed the results of the investigations now under review have been to a considerable extent anticipated in Scheiner's *Astronomical Spectroscopy*. The first forty pages of Part II are occupied with a discussion of the methods adopted for determining the wave-lengths of the lines, which were necessarily different for spectra with numerous lines than for those with few lines, and with a list of solar metallic lines used for comparison and identification. Ninety pages are given to the detailed measures of the wave-lengths of the stellar lines, and the last twenty pages are devoted to special studies of individual lines and deviations from normal types.

A clear statement is given at the outset of the difficulties encountered in making the microscope measures upon what (with the necessarily limited dispersion of the spectrograph) appear as diffuse bands but are really groups of lines, as, for instance, may be seen from a photograph, with powerful dispersion, of the corresponding portion of the solar spectrum. Unless the strongest lines are at the middle of such a group the maximum of intensity on the negative will not fall at

the middle of the band, hence a setting on the middle of the band would differ from one on the point of maximum intensity, with a corresponding uncertainty as to exactly what has been measured.

Professor Scheiner has based his wave-lengths upon the so-called Potsdam system,—which will be regretted by most spectroscopists, among whom Rowland's standards have now so generally been adopted. While admitting the superiority of Rowland's atlas, and the greater relative accuracy of the (then comparatively few) standard wave-lengths published by Rowland, his need of a complete list of *all* the solar lines is assigned as the chief reason for using the Potsdam wave-lengths. It should be remarked that at the time the work was done, Rowland's comprehensive "table of solar spectrum wave-lengths," now in progress of publication in this JOURNAL, was of course not available. But Scheiner adds: "Another important consideration was influential in making the choice of the Potsdam system. The basis of the Potsdam absolute wave-lengths has been published in complete detail in the fifth volume of the Potsdam publications, so that every one is in position to form his own judgment as to the reliability of the measurements and reductions, and such a control is very necessary when the introduction of a system is concerned. This is not possible of the Rowland system, in fact one can hardly speak definitely of a Rowland system, since the wave-length of D_1, upon which it is based, has been repeatedly altered of late and apparently is still continually subject to changes." [However, for ordinary work on stellar spectra, the difference between the two systems is comparatively slight, the corrections to reduce from Potsdam to Rowland being: at λ4000, —0.079 tenth-meters; at λ4400,—0.087; at λ4800,—0.094 tenth-meters.]

For measuring spectra with numerous lines, a negative of the solar spectrum, taken under average conditions of adjustment, served as the standard, one hundred lines between λ4000 and 4860 being selected as "normal lines." These lines were carefully measured on this plate and thus the distance in millimeters of each line from the $H\gamma$ line was obtained and platted as ordinate to the known wave-length as abscissa. In order that hundredths of a tenth-meter could be accurately read off, the scale had to be large, the length of the curve reaching seven meters. From the curve an interpolating table for transforming mm. distances into $\mu\mu$ was calculated for the intervals between each pair of normal lines. On the star plates the normal

lines were identified by placing the Sun plate, cut in halves lengthwise, film down on the star plate, so that the normal lines in the latter were the continuations, or nearly so, of the marked normal lines on the Sun plate. Of course the resulting wave-lengths are obtained on the assumption that the wave-lengths of the normal lines in the star are precisely the same as in the Sun, or in other words, the identification of the normal line in the star is assumed. The wave-lengths are given to hundredths of a tenth-meter.

An equal accuracy could not be attained in spectra with few lines, since for stars of Class Ia, there is practically only $H\gamma$ to serve as a point of reference; whence it was necessary that the difference in dispersion as compared with the solar plate be determined from every plate from the data as to temperature during the exposure, and setting of the camera objective. This difference in dispersion was obtained empirically by comparing the measured distance between the artificial F and $H\gamma$ lines (on the comparatively few star plates showing both distinctly) with the same distance of the dark lines in the solar negative. The approximate correctness of this procedure was checked by two other empirical methods, but the final accuracy suffers from the necessary uncertainty of these corrections, which now give the quantities required to reduce the distances from $H\gamma$ on the star plate to those on the solar plate. The two plates were next brought together under the microscope as in the first method, and settings were made upon each star line and the nearest normal line on the solar plate, which gave the distance of the unknown star line from the artificial $H\gamma$ line, and that of the normal solar line from the solar $H\gamma$ line, and from these the final wave-length was deduced.

In order to identify the lines in stellar spectra with the elements producing them, Scheiner was obliged to make out a list, based upon the metallic spectra of Kayser and Runge, Thalén, and Rowland, of all the lines in the Potsdam catalog of the solar spectrum, between $\lambda 4001$ and 4863, with which metallic lines coincide. Not quite a thousand lines, whose identification was fairly certain, were obtained for future reference in the progress of the work.

In spectra of Type I a special examination was made of the distribution of light in the broad $H\gamma$ line. Scheiner advocates the view that the breadth and haziness of the hydrogen lines is due to the great extent of the atmospheres of these stars,—supposed to be of the same order as the diameter of the photosphere. Then the absorp-

tion spectrum of the photosphere and the emission spectrum of the atmosphere would be optically superposed, the bright lines upon the dark, and the effect of the former would be proportional to the relative height of the atmosphere (as that would determine the relative *quantity* of light received from the two sources). Scheiner distinguishes three species, with eight varieties, of light-curves giving the distribution of light in the resulting line. In the first three varieties the height of the atmosphere being supposed slight, the intensity falls off uniformly from the edge to the middle of the dark line, the steepness of the curve varying with the contrast in temperature between photosphere and atmosphere. Next the height of the atmosphere is supposed to be so considerable that the effect of the superposed bright line begins to be seen, the intensity falling off sharply at the edges but rising to a secondary maximum in the middle, or at least remaining uniform, or falling off hardly at all even at the edges,—three varieties. In the third species the supposed great height of the atmosphere gives the bright lines the predominance, the effect of the dark lines being observable only at the edges, or not at all,—two varieties. The first variety of this last species of line is considered to correspond with the $H\gamma$ line in γ Cassiopeiae. Examples of the first species of curves are found in α Lyræ, α Canis majoris, β and δ Leonis; of the second, in α Virginis, η Ursæ majoris, γ and δ Orionis. In the case of the last star the $H\gamma$ line is so narrow, but brightened up in the middle, that but little more brightening would make the line invisible. The author states that in this case "δ Orionis would be an example of a star without hydrogen lines," but it would be safer and more accurate to say "without the $H\gamma$ line," for in the light of recent observations made elsewhere we are not at liberty to judge with certainty as to the behavior of the other line from the appearance of one line even of the same series.

As to individual spectra, in the case of α Aquilae, Scheiner favors the view (suggested by Pickering for other stars) that here two component stars, one of the first class, the other of the second, produce a composite spectrum, similar to that of the Sun, but the lines peculiar to Type Ia relatively conspicuous. In the case of Procyon, Scheiner does not consider such an explanation possible, regarding the spectrum merely as in transition from Ia to IIa. The two plates of Cassiopeiae that were examined showed no lines except bright $H\gamma$, although quite conspicuous dark lines have been photographed by several other

observers,—another illustration that we must not infer too much as to the character of the whole spectrum from the study of a limited part of it.

We cannot here discuss the details of the spectra of the different types, which have been to a considerable extent already anticipated by other investigators, and in previous publications by Scheiner himself, and so we pass to the important section on special researches on individual lines. The magnesium line at λ 4481 has received especial attention. It is present in nearly all Ia spectra, and appears faintly in a few of Type IIa. It varies greatly in intensity in different stars (there is no suggestion of it in α Ophiuchi, of Class Ia), and from its behavior antithetic to that of another Mg line, at λ 4352, in stars and in the laboratory, Scheiner finds a criterion of stellar temperature. He concludes that the temperature of the so-called absorbing layer—the uppermost stratum of the photosphere—is in stars of Class IIIa approximately that of the electric arc (3000°–4000° C.); in the Sun and stars of Class IIa, it is higher, but does not reach the temperature of the spark of a Leyden jar; in stars of Class Ia, it is approximately that of this spark (upper limit about 15000° C.).

A particularly interesting line, characteristic of all Orion stars of Class I, and later found by Scheiner in β Persei, α Virginis, β Tauri and η Ursæ majoris, is that at λ 4471, heretofore called the "Orion line." Since the memoir was published it has been proven to be due to helium, and (as suggested here by Scheiner) coincides with the well-known chromospheric line "*f*," as well as with a strong line in the nebular spectrum. From the similarity in its behavior to the $H\gamma$ line, Scheiner had concluded that the element producing it must be closely related to hydrogen, but possibly with a lower atomic weight. An idea of the accuracy of the measures of its wave-length may be gained by comparison with the determinations on laboratory helium. Scheiner gives $\lambda = 4471.75$, which on Rowland's scale would be 4471.66. Runge and Paschen find for the two components λ 4471.85 and 4471.66.

Another line attracted attention from its appearance in three of the Orion stars (β, ϵ, and γ) and α Virginis. Its wave-length was found to be 4388.30 (or 4388.21 on Rowland's scale). It has since been found with helium in the spectra of mineral gases, falling according to Runge and Paschen at λ 4388.11 in the second harmonic series of their so-called "lighter constituent" of helium.[1]

[1] Might the reviewer suggest the use for the present of the symbol *He* for the so-called "heavier constituent" or "helium proper," and *he* for the "lighter constituent"?

Other lines at λ 4384.16, 4233.59, 4468.64, and 4549 (group) are especially discussed, but their identification remains uncertain.

The memoir next gives the average spectrum of Type IIa, from the mean of the wave-lengths of the lines in α Bootis, α Aurigae, β Geminorum, α Tauri, and α Arietis, with a comparison with the Sun; and then follows a list of the lines in Type IIa-IIIa which deviate in their appearance, or are absent from the solar spectrum. Scheiner concludes that "the cause is the same for the (in instances) very considerable variation in intensity of the lines in the different stars." From a special comparison of the marked variation of α Persei (IIa), and its similarity to α Cygni (Ib), the opinion is reached that α Persei formerly had a spectrum similar to that of α Cygni, so that a missing link,—a transition stage from Ib to IIa,—is discovered.

The "*Schlussbetrachtungen*" of the author occupy the last three pages of the memoir, and it is difficult to condense them into less space. These new observations are not confirmatory of Schmidt's solar theory, being more readily explained by the old theories than by it. Kirchoff's Law should not be rejected but enlarged, its old form to be retained until we know what, if anything (luminescence ?), is to be substituted in it for temperature. Views on the evolution of heavenly bodies: the fundamental difference between the stellar and the nebular spectrum is the strong continuous spectrum, which might be produced either by gases under high pressure or by incandescent products of condensation (like our clouds of aqueous vapor). Adopting the latter origin, the attempt is made to show that with the cooling of a star the hydrogen lines gradually diminish in breadth while the metallic lines become stronger. A star of class Ia is a gas ball with an extensive atmosphere of hydrogen, all the other metallic gases are so far inside the photosphere (at a temperature comparable with the electric arc) as to produce no appreciable absorption. The radiation into space brings contraction, which keeps up the temperature inside, but the temperature contrast of atmosphere and photosphere becomes sharper, so that metallic lines begin to appear. Thus finally class IIa is reached. It is not important that the temperature of the photosphere in class IIa should be much less than in Ia, but that, in consequence of the contraction, the rate of fall of temperature outside of the photosphere is very much greater. The time cannot be determined when contraction ceases to compensate for radiation, since we do not know whether the decreased intensity of the more refrangible spectrum in Type IIa, and still more

in IIIa, is due to a diminution in radiation or an increase in absorption. When the temperature of the photosphere is so reduced as to be comparable with that of the electric arc, it is plausible that stable chemical compounds should form, giving the characteristic spectrum of Type III. Ic must precede Ia in order of evolution, but the data here used cannot apply back of Ic, or beyond IIIa.

The permanent objection to the above theorizing is that the ascending branch of the temperature curve for stars (those growing hotter) is still unprovided for; but theorizing occupies only a minimum space of this volume.

It cannot be forgotten that only a very few stars could be discussed, and these only for a limited part of their spectrum. Classes IIIb and IIb do not occur in the list of stars, and hardly Ic.

An equally careful study, with orthochromatic plates, should be undertaken for the lower part of the spectrum of the same stars, and the number of stars should be increased as far as the optical power of the telescopes permit. The number of spectrographs now attached to large refractors in this country ought to allow such a work to be begun here. Large reflectors, too, could be especially serviceable.

F.

Molecules and the Molecular Theory of Matter. A. D. RISTEEN, S. B. (Ginn & Co., Boston, 1895.)

IF one were required to characterize in a single phrase the physics of the nineteenth century, as distinguished from that of the two immediately preceding centuries, he might perhaps say that modern physics is a molecular science: the older physics a molar science. For nearly all problems in physical science, including the whole of chemistry, elasticity, capillarity, light, heat, electricity, and magnetism, involve explicit reference to molecular changes.

Any attempt, therefore, to discuss "molecular theories" within the limits of one volume must at least be called bold: unless the discussion degenerates into a mere enumeration of facts, or is confined to some limited portion of the subject.

Nevertheless, the volume before us is an excellent presentation of modern views concerning the "Molecular Theory of Matter," which means nothing less than the whole field covered by Physics, Chemistry and Physical Chemistry.

The first third of the book is devoted to the kinetic theory of gases: both methods and results are presented in a clear and scholarly manner. This is the best chapter of the work, because the author, while not exceeding the limits of a *résumé*, goes into some detail, and makes the treatment much less "scrapy" than other portions, *e. g.*, the one page devoted to *Electrolysis*, or the three pages given to the *Electromagnetic Theory of Light*. All that is said concerning gases will repay careful reading, for some of the more recondite points are made very clear.

In the subsequent portions the author covers a tremendous amount of ground, theories of capillarity, solution, osmotic pressure, dissociation, etc.; theories of light, gravitation, etc., with the result that only in very few places has he risen above the level of the ordinary text-book. However, in a treatment avowedly popular one can hardly say that these limits should be exceeded. The chapter on "*Molecular Magnitudes*" is clear and valuable.

One of the chief merits of the volume as a whole is that the author has throughout drawn a fairly sharp line between experimental facts and speculations. No one talks about molecules with such reckless freedom as the beginner: and, for many a beginner, such a book, even with the warnings it contains, would be positively dangerous, as tending to lessen his respect for such experimental data as Burns describes,

> "But Facts are cheels that winna ding
> An' downa be disputed."

Several pages are devoted to *High Vacua*, but one looks in vain for any mention of Lenard's work on *Cathode Rays*, which must be considered as rendering quite untenable the views of Crookes here described.

One other remark concerning the book as a whole: excellent as it is, its value would have been greatly enhanced by some critical estimate of the comparative value of the many methods there described; they are left too much on a par, and the reader is not satisfied. But such comparison is a difficult art, one acquired, perhaps, only after the man has actually been over the ground in an experimental way.

The book is an important contribution to the literature both of Chemistry and Physics.

H. C.

On the Electrolysis of Gases. J. J. THOMSON. *Proc. R. Soc.* **58**, No. 350.

AT various intervals during the last five or six years Professor J. J. Thomson has published the results of a series of beautiful and remarkable experiments, made with a view of determining the manner in which electricity is conducted by gases. The series has now culminated in a paper which may be considered as a definite proof that the process is one of electrolysis.

The results of the work previously done are, for the most part, contained in his "Recent Researches in Electricity and Magnetism." It is there shown that the velocity of the electric discharge in vacuum tubes is about one-half that of light, but varies greatly with the dimensions of the tube and the pressure of the gas; that the energy necessary to project charged molecules of gas at that velocity is much greater than the electric energy furnished to the tube, and that therefore, the process cannot be one of pure convection, though in certain portions of the tube it is probably of this character. It is also shown that when a discharge is passed through steam, under certain conditions, oxygen and hydrogen are liberated at the anode and kathode in the same quantities as at the terminals of a voltameter placed in the circuit.

In Professor Thomson's latest experiments two forms of vacuum tubes were used; one with a very fine capillary bore, the other fairly wide and with a metallic partition in the middle placed perpendicularly to the line joining the electrodes. In both tubes the electrodes are at the ends, consequently in the wider tube the discharge, after leaving the anode, passes through the metallic partition and thence to the kathode, making the side of the metallic partition at which it entered a kathode, and that by which it left an anode. The advantage of this latter form of tube is that the spectra of both anode and kathode can be observed simultaneously.

The experiments were made by introducing a small quantity of pure and dry gas into a tube, passing a discharge through it, and observing through the spectroscope the nature of the gas at the electrodes. The general results were as follows: When the discharge is passed through a compound gas, such as HCl, HBr, BrCl, the discharge is at first uniform in color, but after the lapse of a few minutes the parts surrounding the electrodes become colored differently and the spectroscope shows that the negatively charged ion has gone to the anode

and the positively charged one to the kathode. If the current be reversed, the spectra flash out more brightly at first, but remain in their old positions for a time, then disappear, and finally make their appearance again at the electrode opposite to that at which they were originally. The nature of the charge on a gas atom may vary. When HCl and HBr are electrolysed in the tube, Cl and Br both go to the anode. But when BrCl is placed in the tube, the Br goes to the kathode, showing that the sign of its charge has changed. When an electropositive element is substituted for an electronegative one, as in $CHCl_3$, the hydrogen goes to the anode, showing that it has a charge of the same kind as that of the Cl atom which it has replaced.

The most important results, however, from the point of view of the spectroscopist, are those in which simple substances were subjected to the discharge. From these it appears that carbon, hydrogen and nitrogen have different spectra according to whether they are charged positively or negatively. Positively charged carbon shows the CO spectrum, negatively charged carbon shows the candle spectrum. Positively charged hydrogen shows the green line brighter than the red, with negatively charged the reverse is the case.

It is conceivable that these differences might be due to a higher temperature at one electrode than at the other. But Professor Thomson meets this objection by pointing out that when the current is reversed, so far from the spectra reversing at once, they become intensified, keeping their old positions, then disappear and finally appear again at the opposite electrodes, a result which would seem to negative any such supposition. He adduces further evidence, from the observed behavior of carbon compounds which do disassociate when the current has been passed through for a time, tending to confirm his theory.

REGINALD A. FESSENDEN.

RECENT PUBLICATIONS.

AT the second annual meeting of the Board of Editors of THE ASTROPHYSICAL JOURNAL, recently held at the Harvard College Observatory, it was voted that an attempt be made to increase the scope of the bibliography of astrophysics and spectroscopy published under the heading "Recent Publications." In their present form the monthly lists of recent papers no doubt serve a useful purpose, though they make no claim to completeness. It is evident, however, that a bibliography which derives its titles mainly from the more accessible journals, the annals of the more important societies and the publications of observatories may be of no great value: it should also include publications of obscure origin. Papers of great importance frequently appear in the annals of the smaller societies, or are published at irregular intervals by institutions or individuals. In many cases but few copies of such papers are distributed, and consequently it sometimes happens that contributions of great value are overlooked for years.

It is now proposed that all who are interested in the formation of a complete bibliography of astrophysics and spectroscopy give their assistance by forwarding such titles as come to their notice. The bibliography is intended to cover all investigations of radiant energy, whether conducted in the observatory or in the laboratory. Special mention may be made of photographic and visual observations of the heavenly bodies (other than those pertaining to "astronomy of position"); spectroscopic, photometric, bolometric and radiometric work of all kinds; descriptions of instruments and apparatus used in such investigations; and theoretical papers bearing on any of these subjects.

To those who express themselves as willing to assist in this work cards conveniently arranged for the insertion of titles will be sent. These can be filled out, and mailed to the JOURNAL from time to time. Authors of papers are requested to send copies to Professors Hale and Keeler, in order that the titles may certainly find a place in the bibliography, and also for the purpose of review. If for any reason copies cannot be sent the title alone will serve for insertion in the bibliography.

The following list includes the serial publications from which the

greater part of the titles now appearing in the bibliography are obtained. The abbreviated title is given in a parenthesis following the full title. Where none appears it is understood that the full title is to be used.

The editors will continue to index these publications, and the request for titles therefore applies only to papers not contained in them. This restriction does not include reprints of papers. These will be welcome, from whatever source they may be derived.

Papers, titles, or offers of assistance should be addressed to George E. Hale, Kenwood Observatory, Chicago, or to James E. Keeler, Allegheny Observatory, Allegheny, Pa.

Abhandlungen der K. Akademie der Wissenschaften zu Berlin (Abh. d. K. Akad. d. W. Berlin).

Abhandlungen der K. Bayrischen Akademie der Wissenschaften zu München (Abh. d. K. Akad. d. W. München).

American Chemical Journal (Am. Chem. Jour.).

American Journal of Science (Am. Jour. Sci.).

American Meteorological Journal (Am. Met. Jour.).

Annalen der Physik (Wied. Ann.).

Annales de chimie et de physique (Ann. Chim. et Phys.).

Annales ne l'école normale supérieure (Ann. école norm. supérieure).

Annuaire du Bureau des Longitudes.

Anthony's Photographic Bulletin (Anthony's Photo. Bull.).

Archives des sciences physiques et naturelles (Arch. de Genève).

Archives Néerlandaises des Sciences (Arch. Néerlandaises).

Astronomical Journal (Ast. Jour.).

Astronomische Nachrichten (A. N.).

Astrophysical Journal (Ap. J.).

Atti della R. Accademia di Roma (Atti d. R. Accad. di Roma).

Berichte der Deutschen Chemischen Gesellschaft (Chem. Ber.).

Berichte über die Verhandlungen der K. Sächsischen Gesellschaft der Wissenschaften in Leipzig (Ber. d. K. Gesell. d. W. Leipzig).

British Journal of Photography (Brit. Jour. Photo.).

Bulletin astronomique (Bull. Astr.).

Bulletin de l'académie impériale de St. Pétersbourg (Bull. Acad. St. Pétersbourg).

Bulletin de l'académie royale de Belgique (Bull. Acad. R. Belgique).

Bulletin de la société astronomique de France (Bull. Soc. Astr. France).

Bulletin de la société chimique de Paris (Bull. Soc. Chim. Paris).

Bulletin de la société impériale des naturalistes de Moscou (Bull. Soc. Nat. Moscou).

Chemical News (Chem. News).

Ciel et Terre.

Comptes rendus de l'Academie des Sciences (C. R.).
Electrician.
Elektrotechnische Zeitschrift (Elektrotechn. Zeitschr.).
English Mechanic (Eng. Mech.).
Engineering.
Himmel und Erde (Him. u. Erde).
Jahresbericht der Chemie (Jahresber. d. Chem.).
Johns Hopkins University Circulars (J. H. U. Circulars).
Journal de physique théorique et appliquée (Jour. de Phys.).
Journal für praktische Chemie (Jour. prakt. Chem.).
Journal of the British Astronomical Association (Jour. B. A. A.).
Journal of the Chemical Society of London (Jour. Chem. Soc. London).
Journal of the Franklin Institute (Jour. Franklin Inst.).
Knowledge (Knowl.).
Mathematische und Naturwissenschaftliche Berichte aus Ungarn (Ber. aus Ungarn).
Memoirs of the British Astronomical Association (Mem. B. A. A.).
Memoirs of the Royal Astronomical Society (Mem. R. A. S.).
Memorie della Società degli Spettroscopisti Italiani (Mem. Spettr. Ital.).
Meteorologisches Zeitschrift (Meteorolog. Zeitschr.).
Monthly Notices of the Royal Astronomical Society (M. N.).
Nachrichten von der K. Gesellschaft der Wissenschaften und der Georg-August Universität in Göttingen (Götting. Nachr.).
Nature (Nat.).
Naturwissenschaftliche Rundschau (Naturw. Rund.).
Nuovo Cimento.
Obers. K. Danske Vidensk. Selskabs. Forhandl. Kobenhavn.
Observatory (Obs'y.).
Philosophical Magazine (Phil. Mag.).
Philosophical Transactions of the Royal Society of London (Phil. Trans.).
Photo-Beacon.
Photographic News (Photo. News).
Photographic Times (Photo. Times).
Physical Review (Phys. Rev.).
Popular Astronomy (Pop. Astron.).
Proceedings of the American Academy of Arts and Sciences (Proc. American Acad.).
Proceedings of the Cambridge Philosophical Society (Proc. Cambridge Phil. Soc.).
Proceedings of the Physical Society of London (Proc. Phys. Soc. London).
Proceedings of the Royal Institution (Proc. R. Institution).
Proceedings of the Royal Society of Dublin (Proc. R. Soc. Dublin).

Proceedings of the Royal Society of Edinburgh (Proc. R. Soc. Edinburgh).

Proceedings of the Royal Society of London (Proc. R. Soc.).

Publications of the Astronomical Society of the Pacific (Pub. A. S. P.).

Rendiconti dell' accademia delle science fisiche et matematiche di Napoli (Rend. R. Accad. di Napoli).

Rendiconti della R. Accademia di Roma (Rend. R. Accad. di Roma).

Report of the American Association for the Advancement of Science (Report A. A. A. S.).

Report of the British Association for the Advancement of Science (Report B. A. A. S.).

Science.

Séances de la société française de physique (Séances Soc. Franc. Phys.).

Sirius.

Sitzungsberichte der K. Akademie der Wissenschaften zu Berlin (Sitz. d. K. Akad. d. W. Berlin).

Sitzungsberichte der K. Bayrischen Akademie der Wissenschaften zu München (Sitz. d. K. Akad. d. W. München).

Sitzungsberichte der mathematische-naturwissenschaftliche Classe der K. Akademie der Wissenschaften, Wien (Sitz. d. K. Akad. d. W. Wien).

Sitzungsberichte der Physikalisch-Medicinischen Societät in Erlangen Sitz. d. Phys. med. Soc. Erlangen).

Svenska vetenskaps Akademiens Handlingar (Svenska vetensk. Akad. Handl.).

Technology Quarterly (Tech. Quarterly).

Transactions of the Astronomical and Physical Society of Toronto (Trans. Ast. Phys. Soc. Toronto).

Transactions of the Royal Society of Dublin (Trans. R. Soc. Dublin).

Transactions of the Royal Society of Edinburgh (Trans. R. Soc. Edinburgh).

Verhandelingen der Koninklijke Akademie van Wetenschappen te Amsterdam (Verhand. K. Akad. Wetens. Amsterdam).

Verhandlungen der Schweizeschen Naturforschenden Gesellschaft (Verh. d. Schweiz. Naturforsch. Gesell.).

Verslagen van de Zittingen der Wis-en Natuurkundige Afdeeling van de Koninklijke Akademie van Wetenschappen te Amsterdam (Verslagen K. Akad. Wetens, Amsterdam).

Vierteljahrschrift der Astronomischen Gesellschaft (V. J. S. Astr. Gesell.).

Vierteljahrschrift der Naturforschenden Gesellschaft in Zurich (V. J. S. d. Naturforsch. Gesell. in Zurich).

Wilson's Photographic Magazine.

Zeitschrift für der physikalischen und chemischen Unterricht (Z. f. d. Phys. u. Chem. Unterricht).

Zeitschrift für Elektrotechnik und Elektrochemie (Z. f. Elektrotech. u. Elektrochem.).

Zeitschrift für Instrumentenkunde (Z. f. Instrum.).

Zeitschrift für Mathematik und Physik (Z. f. Math. u. Phys.).

Zeitschrift für physikalische Chemie (Z. f. Phys. Chem.).

1. THE SUN.

ADAMS, J. S. The Growth and Decay of Sun-spots. Jour. B. A. A. 5, 515, 1895.

BROWN, MISS E. Some Curious Changes in Sun-spots. Jour. B. A. A. 5, 513, 1895.

LOCKYER, J. NORMAN. Preliminary Report on the Results obtained with the Prismatic Cameras during the Total Eclipse of the Sun, April 16, 1893. Phil. Trans. 185, 711–719, 1895.

WILSON, WILLIAM E. and P. L. GRAY. Experimental Investigations on the Effective Temperature of the Sun, made at Daramona, Streete, Co. Westmeath. Phil. Trans. 185, Part 1., 361–396, 1895.

2. THE SOLAR SPECTRUM, INFRA-RED, VISIBLE, AND ULTRA-VIOLET.

PALMER, A. D. JR. On the Wave-length of the D_3 Helium line. Am. Jour. Sci. (Ser. 3) 50, 357–358, 1895.

ROWLAND, H. A. Preliminary Table of Solar Spectrum Wave-lengths, IX. Ap. J. 2, 306–315, 1895.

3. STARS AND STELLAR PHOTOMETRY.

ANDERSON, T. D. New Variable Star in Delphinus. A. N. 139, 27–29, 1895.

BECKER, E. Neuer Veränderlicher in Aquarius. A. N. 139, 41, 1895.

BRESTER, A. Variable Red Stars. Knowl. 18, 251–253, 1895.

EASTON, C. Over de verdeeling der sterren in een gedeelte van den melkweg. Verslagen K. Akad. Wetens., Amsterdam, 3, 183–189, 1895.

PARKHURST, HENRY M. Notes on Variable Stars, No. 10. Ast. Jour. No. 356, 15, 162–165, 1895.

PAUL, H. M. Observations of two Southern Variables. Ast. Jour. No. 357, 15, 173, 1895.

PICKERING, E. C. Harvard College Observatory Circulars, No. 1 and No. 2. Ap. J. 2, 320–323, 1895.

ROBERTS, ALEX. W. Close Binary Systems and their Relation to Short Period Variations. Ap. J. 2, 283–292, 1895.

YENDELL, PAUL S. Observed Maxima and Minima of Variable Stars. Ast. Jour. No. 357, 15, 173–174, 1895.

4. STELLAR SPECTRA, DISPLACEMENTS OF LINES AND MOTIONS IN THE LINE OF SIGHT.

OUDEMANS, J. A. C. Over de verandering van de helderheid der vaste sterren tengevolge harer eigene beweging in de richting der gezichtslijn. Verslagen K. Akad. Wetens., Amsterdam, 3, 122–125, 1895.

RUNGE, C. and F. PASCHEN. Helium and the Spectrum of Nova Aurigae. Nat. 52, 544, 1895.

SEE, T. J. J. Theory of the determination, by means of a single spectroscopic observation, of the absolute dimensions, masses and parallaxes of stellar systems whose orbits are known from micrometrical measurement; with a rigorous method for testing the universality of the law of gravitation. A. N. 139, 17–25, 1895.

5. PLANETS, SATELLITES AND THEIR SPECTRA.

ALDIS, W. S. Observation of the Dark Side of Venus. Jour. B. A. A. 5, 513, 1895.

ANTONIADI, E. M. The Dark Hemisphere of Venus. Knowl. 18, 255, 1895.

BRENNER, L. Die Schatten auf der Venus. A. N. 139, 25–27, 1895.

CAMPBELL, W. W. Note on the melting of the Polar Cap of Mars. Pub. A. S. P. 7, 292–293, 1895.

DENNING, W. F. La puissance relative des petites et des grandes lunettes pour l'observation des détails planétaires. Ciel et Terre, No. 17, 399–408, 1895.

VERY, F. W. Photometry of a Lunar Eclipse. Ap. J. 2, 293–305, 1895.

7. NEBULÆ AND THEIR SPECTRA.

BARNARD, E. E. New Planetary Nebula. A. N. 139, 43, 1895.

BARNARD, E. E. On the New Merope Nebula. A. N. 139, 41–43, 1895.

KEELER, J. E. Note on a cause of differences between drawings and photographs of nebulæ. Pub. A. S. P. 7, 279–282, 1895.

MAUNDER, E. W. What is a Nebula? Knowl. 18, 253, 1895.

ROBERTS, ISAAC. Photograph of the Nebulæ Messier 78 and Herschel IV., 36 Orionis. Knowl. 18, 253, 1895.

RÜMKER, G. Positionsbestimmungen von Nebelflecken und Sternhaufen. Mitth. der Hamburger Sternwarte, No. 1, 1895.

8. TERRESTRIAL PHYSICS.

AMSLER, J.-LUFFONT. Zur Erklärung des Alpenglühens. Z. f. d. Phys. u. Chem. Unterricht, 8, 6, 319–320, 1895.

EKHOLM u. ARRHENIUS. Über den Einfluss des Mondes auf den Elektrischen Zustand der Erde. Svenska Vetensk. Akad. Handel. 19, I., 1894.

LIZNAR, J. Ein Betrag zur Kenntniss der 26 tägigen Periode des Erdmagnetismus. Sitz. d. K. Akad. d. W. Wien, 103, Abth. IIa., 726–739, 1894.

TRABERT, W. Zur Theorie der elektrischen Erscheinungen unserer Atmosphäre. Sitz. d. K. Akad. d. W. Wien, 103, Abth. IIa, 1023–1061, 1894.

WOOD, W. H. The Local Origin of the Aurora Borealis. Sci. Amer. Sup. 40, 16569, 1895.

9. EXPERIMENTAL AND THEORETICAL PHYSICS.

BORGESIUS, A. H. Beschrijving van een interferentierefractometer, Moleculair brekingsen dispersie-vermogen van eenig zouten in oplossing. Verslagen K. Akad. Wetens., Amsterdam, 3, 99–104, 1895.

DAVIS, J. WOODBRIDGE. How translatory movements may be derived from vibratory movement. School of Mines Quarterly, 16, 4, 313–326, 1895.

DOJES, P. H. Over de theorie der straling in verband met de voorstelling van Fourier. Verhand. K. Akad. Wetens., Amsterdam, 3, No. 4, 26 pp., 1895.

GUILLAUME, C. E. Lighting by means of Incandescent Gases. L'Ind. El. 4, 378, 1895.

JÄGER, G. Longueur de chemin moyenne des molecules gazeuses. Arch. de Genève, 34, 376–377, 1895.

JULIUS, V. A. Sur les ondes lumineuses sphériques et cylindriques. Arch. Néerlandaises, 28, 226–235, 1894.

LARMOR, JOSEPH. A Dynamical Theory of the Electric and Luminiferous Medium. Phil. Trans. 185, 719–823, 1895.

LENARD, P. Ueber die Absorption der Kathodenstrahlen. Wied. Ann. 56, 255–275, 1895.

MICHELSON, A. A. On the Broadening of Spectral Lines. Ap. J. 2, 251–263, 1895.

MILLIKAN, R. A. A Study of the Polarization of the Light emitted by Incandescent Solids and Liquid Surfaces. II. Phys. Rev. 3, 177–192, 1895.

PARRY, JOHN. The Spectrum of the Bessemer Flame and the Hardening of Steel. Engineering, 60, 585, 1895.

PFLÜGER, A. Anomale Dispersionscurven einiger fester Farbstoffe, Wied. Ann. 56, 412–432, 1895.

QUESNEVILLE, G. De la double réfraction elliptique et de la tetrarfringence du quartz dans le voisinage de l'axe. C. R. 121, 522–525, 1895.

RAMSAY, WILLIAM. Attempt to liquefy Helium. Nat. 52, 544, 1895.

REY, J. Les Lumen-Mètres et la Méthode Photométrique Nouvelle de M. A. Blondel pour la Mesure du Flux Lumineux. Bull. de la Soc. Intern. des Électriciens, 1er Mai, 1895.

SCHOTT, G. A. On the Reflection and Refraction of Light. Phil. Trans. 185, 823–887, 1895.

SIERTSEMA, L. H. Over de dispersie bij de magnetische draaiing in zuurstof. Verslagen K. Akad. Wetens., Amsterdam, 3, 230–238, 1895.

STEVENS, W. LECONTE. Recent Progress in Optics. Am. Jour. Sci. (Ser. 3) 50, 377–386, 1895.

VERY, F. W. Note on Paschen's Laws of Radiation. Ap. J. 2, 316–317, 1895.

WIEDEMANN, E. und G. C. SCHMIDT. Ueber Luminescenz von festen Körpern und festen Lösungen. Wied. Ann. 56, 201–254, 1895.

WIND, C. H. Beschouwingen over het magneto-optisch verschijnsel van Kerr. Verslagen K. Akad. Wetens., Amsterdam, 3, 82–89, 1895.

ZEEMAN, P. Metingen over Kerr's verschijnsel bij normale polaire terugkaatsing op ijzer en Kobalt. Verslagen K. Akad. Wetens., Amsterdam, 3, 221–230, 1895.

ZEEMAN, P. Over de bepaling der optische constanten van magnetiet. Verslagen K. Acad. Wetens., Amsterdam, 3, 230, 1895.

10. THE SPECTRA OF THE ELEMENTS.

CREW, H. Photographic Maps of Metallic Spectra. Ap. J. 2, 318–320, 1895.

CROOKES, W. The Spectrum of Helium. Am. Jour. Sci. (Ser. 3) 50, 302–308, 1895.

HARTLEY, W. N. Flame Spectra at High Temperatures.
Part I. Oxy-hydrogen Blow-pipe Spectra.
Part II. The Spectrum of Metallic Manganese, of Alloys of Manganese, and of Compounds containing that Element.
Part III. The Spectroscopic Phenomena and Thermo-Chemistry of the Bessemer Process.
Phil. Trans. 185, 161–213; 1029–1041; 1041–1093, 1895.

LOCKYER, J. NORMAN. The New Mineral Gases. Nat. 52, 547–549, 1895.

LOCKYER, J. NORMAN. On the Photographic Arc-Spectrum of Electrolytic Iron.
On the Photographic Arc-Spectrum of Iron Meteorites.
Phil. Trans. 185, 983–1023; 1023–1029, 1895.

11. PHOTOGRAPHY.

BOTHAMLEY, C. H. Sensitising Action of Dyes on Gelatino-Bromide Plates. Engineering, 60, 566, 1895.

TURNER, H. H. Formulæ for converting measures on a photographic plate into R. A. and Decl. Obs'y 18, 351–355, 1895.

12. INSTRUMENTS AND APPARATUS.

LIVEING, G. D. On Benham's Artificial Spectrum. Proc. Cambridge Phil. Soc. 8, iv., 249, 1895.

MCDONALL, F. K. An Appliance for the Direct Comparison of Star Colors. Jour. B. A. A. 5, 517–519, 1895.

MÜLLER, F. C. G. Über eine neue Construktion des Uhrwerkheliostaten. Z. f. d. Phys. u. Chem. Unterricht, 8, (Ser. 7) 354–357, 1895.

TUTTON, A. E. An Instrument of Precision for Producing Monochromatic Light of any desired Wave-length, and its use in the Investigation of the Optical Properties of Crystals. Phil. Trans. 185, 913–943, 1895.

WADSWORTH, F. L. O. The Modern Spectroscope. XIII. A New Multiple Prism of Great Resolving Power. Ap. J. 2, 264–282, 1895.

WARREN, H. E. and G. C. WHIPPLE. The Thermophone, a New Instrument for Determining Temperatures. Tech. Quarterly, 8, 125–153, 1895.

WHIPPLE, GEO. C. The Thermophone. Science, 1, 639–643, 1895.

13. GENERAL ARTICLES.

CERULLI, V. Erratum in Dreyer's N. G. C. of Nebulæ. A. N. 139, 47, 1895.

GRÜNWALD, ANTON K. Über Gewisse Hauptaufgaben der Naturwissenschaften und zwar I. über die Mechan. Vorgänge, welche den Elektr. zu Grunde liegen. Verlag. d. K. Böhm. Gesell. d. W. Prag, 1895.

HILL, E. A. Some additional notes on Argon and Helium. Am. Jour. Sci. (Ser. 3) 50, 359–376, 1895.

MELDOLA, R. Recent Discoveries of Gaseous Elements. Sci. Amer. Sup. 40, 16544, 1895.

PERROTIN. Sur l'observatoire du Mounier. C. R. 121, 542–545, 1895.

SCHLOESINGFILS, TH. Sur le dosage de l'argon. C. R. 121, 525–528; 604–607, 1895.

WALLER, E. Argon. (Résumé). School of Mines Quarterly, 16 (Ser. 3) 220–226, 1895.

WILDE, HENRY. On Helium and its place in the Natural Classification of Elementary Substances. Phil. Mag. 40, 466–471, 1895.

NOTICE.

The scope of THE ASTROPHYSICAL JOURNAL includes all investigations of radiant energy, whether conducted in the observatory or in the laboratory. The subjects to which special attention will be given are photographic and visual observations of the heavenly bodies (other than those pertaining to "astronomy of position"); spectroscopic, photometric, bolometric and radiometric work of all kinds; descriptions of instruments and apparatus used in such investigations; and theoretical papers bearing on any of these subjects.

In the department of *Minor Contributions and Notes* subjects may be discussed which belong to other closely related fields of investigation.

It is intended to publish in each number a bibliography of astrophysics in which will be found the titles of recently published astrophysical and spectroscopic papers. In order that this list may be as complete as possible, and that current work in astrophysics may receive appropriate notice in other departments of the JOURNAL, authors are requested to send copies of all papers on these and closely allied subjects to both Editors.

Articles written in any language will be accepted for publication, but unless a wish to the contrary is expressed by the author, they will be translated into English. If a request is sent *with the manuscript* twenty-five reprint copies of each paper, bound in covers, will be furnished free of charge to the author. Additional copies may be obtained at cost price. No reprints can be sent unless a request for them is received before the JOURNAL goes to press.

The Editors do not hold themselves responsible for opinions expressed by contributors.

THE ASTROPHYSICAL JOURNAL will be published on the first day of every month except July and September. The annual subscription price for the United States, Canada and Mexico is $4.00; for other countries in the Postal Union it is 18 shillings. Correspondence relating to subscriptions and advertisements should be addressed to *The University of Chicago, University Press Division, Chicago, Ill.*

Wm. Wesley & Son, 28 Essex St., Strand, London, are sole foreign agents, and to them all European subscriptions should be addressed.

All papers for publication and correspondence relating to contributions and exchanges should be addressed to *George E. Hale, Kenwood Observatory, Chicago, Ill.*

INDEX TO VOL. II.

SUBJECTS.

Page.

ABSORPTION Bands in Infra-red, Atmospheric. *F. W. Very* - - 237
ARC LIGHT, Temperature of the Crater of an. *W. E. Wilson* - - 212
ARC-SPECTRA of the Elements. III. Platinum and Osmium. *H. A. Rowland* and *R. R. Tatnall* - - - - - - - 184
AURORA BOREALIS, Spectrum of. *W. W. Campbell* - - - 162
B BAND in Stellar Spectra. *W. W. Campbell* - - - - 163
BANDS in the Infra-red Spectrum, Atmospheric Absorption. *F. W. Very* - - - - - - - - - - - - - 237
BAND, Magnesium, at λ5007. *H. Crew* and *O. H. Basquin* - - 100
BELGIAN Astronomical Society - - - - - - - 168
BINARY Systems, Close, and Short Period Variations. *Alexander W. Roberts* - - - - - - - - - - - 283
BROADENING of Spectral lines. *A. A. Michelson* - - - - 251
CARBON, Spectrum of. *H. Crew* and *O. H. Basquin* - - - 103
CATANIA, Photograph of the Nebula near 42 Orionis, made at. *A. Riccò* 164
Solar Observations made in 1894 at. *A. Mascari* - - - 119
CHROMOSPHERE, D_3 Line in the Spectrum of the. *George E. Hale* - 165
Wave-length of the D_3 Line in the Spectrum of the. *George E. Hale* - - - - - - - - - - - - - 384
CLASSIFICATION of Stars of the First Spectral Type. *H. C. Vogel* - 333
CLÈVEITE GAS, Stellar Spectra containing Lines of. *H. C. Vogel* - 333
Helium in. *George E. Hale* - - - - - - - - 76
COLORED STARS, Spectroscopic Observations of. *Friedrich Krueger* 148
CONCAVE Grating Spectroscopes, Fixed-arm. *F. L. O. Wadsworth* - 370
CORONA, Huggins Method of Photographing without an Eclipse. *George E. Hale* - - - - - - - - - - 77
ε CYGNI, Photograph of the Milky Way near. *E. E. Barnard* - - 58
D_3 LINE, Duplicity of. *A. Riccò* - - - - - - - - 236
in the Spectrum of the Chromosphere. *George E. Hale* - - 165
Wave-length of the. *George E. Hale* - - - - - 384
ECLIPSE, Photometry of a Lunar. *F. W. Very* - - - - - 293
EIGHT New Variable Stars. *M. Fleming* - - - - - 354
ELECTROMAGNETIC nature of the Solar Radiation. *H. Ebert* - - 55

ELEMENTS, Arc Spectra of. Platinum and Osmium. *H. A. Rowland* and *R. R. Tatnall* - - - - - - - - - - 184
Infra-red Spectra of. *E. P. Lewis* - - - - - - - 1, 106
FIXED-ARM Concave Grating Spectroscopes. *F. L. O. Wadsworth* - 370
GRANULATION of the Surface of the Sun. *J. Scheiner* - - - 77
GRATING Spectroscopes, Fixed-arm Concave. *F. L. O. Wadsworth* - 370
HARVARD College Observatory Circulars, No. 1 and No. 2. *E. C. Pickering* - - - - - - - - - - - - 320
HELIUM in Clèveite. *George E. Hale* - - - - - - - 76
in β Lyræ. *E. B. Frost* - - - - - - - - - 383
Spectrum of. *W. Crookes* - - - - - - - - 227
HYDROGEN Lines, Stars whose Spectra Contain both Bright and Dark. *W. W. Campbell* - - - - - - - - - - - 177
INFRA-RED Spectrum, Atmospheric Absorption Bands in the. *F. W. Very* - - - - - - - - - - - - 237
Spectra of the Elements. *E. P. Lewis* - - - - - 1, 106
JUPITER'S Satellites, Disks of. *S. I. Bailey* - - - - - 97
LATITUDE of Solar Phenomena, Distribution in. *P. Tacchini* - - 26
LAWS of Radiation, Paschen's. *F. W. Very* - - - - - 316
LENS, "Magic Lantern," for Celestial Photography. *E. E. Barnard* 351
LINE, Duplicity of the D_3. *A. Riccò* - - - - - - - 236
Wave-length of the D_3. *George E. Hale* - - - - 384
LINES, Broadening of Spectral. *A. A. Michelson* - - - - 251
in the Spectrum of Saturn, Form of. *James E. Keeler* - - 63
of Clèveite Gas in Stellar Spectra. *H. C. Vogel* - - - 333
Stars whose Spectra Contain both Bright and Dark Hydrogen. *W. W. Campbell* - - - - - - - - - - 177
Visibility of fine, in a Telescope. *A. A. Michelson* - - - 60
LUNAR Eclipse, Photometry of. *F. W. Very* - - - - - 293
β LYRÆ, Helium in. *E. B. Frost* - - - - - - - - 383
MAGNESIUM Band at λ 5007. *H. Crew* and *O. H. Basquin* - - 100
MAPS of Metallic Spectra, Photographic. *H. Crew* - - - - 318
MARS, Review of Spectroscopic Observations of. *W. W. Campbell* - 28
Twilight Arc upon. *Percival Lowell* - - - - - 136
METEORIC Constitution of Saturn's Rings, Spectroscopic Proof of. *James E. Keeler* - - - - - - - - - - 163
MILKY WAY, Photographs of. *E. E. Barnard* - - - - 58
15 MONOCEROTIS, Photograph of the Milky Way near. *E. E. Barnard* 58
MODERN SPECTROSCOPE. XIII. A new Multiple Transmission Prism of Great Resolving Power. *F. L. O. Wadsworth* - - - 264
XIV. Fixed-arm Concave Grating Spectroscopes. *F. L. O. Wadsworth* - - - - - - - - - - - - 370

MOON, Photographic Search for a Satellite to the. *E. E. Barnard* - 347
MULTIPLE Transmission Prism. *F. L. O. Wadsworth* - - - 264
NEBULA *N. G. C.* 1499, near the Star ξ Persei, Photograph of. *E. E. Barnard* - - - - - - - - - - - - 350
near 42 Orionis, Photograph of. *A. Riccò* - - - - 164
Spectrum of the Trifid. *W. W. Campbell* - - - - 161
42 ORIONIS, Photograph of the Nebula near. *A. Riccò* - - - 164
OSMIUM and Platinum, Arc-Spectra of. *H. A. Rowland* and *R. R. Tatnall* - - - - - - - - - - - - 184
ξ PERSEI, Photograph of the Nebula *N. G. C.* 1499 near the Star. *E. E. Barnard* - - - - - - - - - - - - 350
PHOTOGRAPH of the Nebula *N. G. C.* 1499 near the Star ξ Persei. *E. E. Barnard* - - - - - - - - - - - - 350
PHOTOGRAPHS, Celestial, with a "Magic Lantern" Lens. *E. E. Barnard* - - - - - - - - - - - - 351
of the Milky Way near 15 Monocerotis and ε Cygni. *E. E. Barnard* - - - - - - - - - - - - 58
PHOTOGRAPHIC Maps of Metallic Spectra. *H. Crew* - - - 318
Search for a Satellite to the Moon. *E. E. Barnard* - - - 347
PHOTOGRAPHING the Solar Corona without an Eclipse, Huggins' Method. *George E. Hale* - - - - - - - - 77
PHOTOMETER, New Form of Stellar. *E. C. Pickering* - - - 89
PHOTOMETRY of a Lunar Eclipse. *F. W. Very* - - - - 293
PLATINUM and Osmium, Arc-Spectra of. *H. A. Rowland* and *R. R. Tatnall* - - - - - - - - - - - - 184
Radiation of Incandescent. *Harry Fielding Reid* - - - 160
PRESSURE, Effect of, on the Temperature of Arc Light. *W. E. Wilson* 212
PRISM of Great Resolving Power. *F. L. O. Wadsworth* - - - 264
RADIATION, Electromagnetic Nature of Solar. *H. Ebert* - - - 55
of Incandescent Platinum. *Harry Fielding Reid* - - - 160
Paschen's Laws of. *F. W. Very* - - - - - - - 316
Theory of. *G. Jaumann* - - - - - - - - 215
Recent Publications, 83, 169, 243, 328, 396.
Reviews, 81, 241, 324, 386.
ROMAN COLLEGE, Solar Phenomena Observed at the Royal Observatory. *P. Tacchini* - - - - - - - - - - 26
Solar Observations made at the: January-June, 1895. *P. Tacchini* - - - - - - - - - - - - - 224
SATELLITE to the Moon, Photographic Search for a. *E. E. Barnard* 347
SATELLITES, Disks of Jupiter's. *S. I. Bailey* - - - - - 97
SATURN, Velocities in the System of. *W. W. Campbell* - - - 127
Form of Lines in Spectrum of. *James E. Keeler* - - - 63

SATURN'S RINGS, Spectroscopic Proof of the Meteoric Constitution of. *James E. Keeler* - - - - - - - - - - - - 163
SCHMIDT'S Theory of the Sun. *George E. Hale* - - - - - 69
SEARCH for a Satellite to the Moon, Photographic. *E. E. Barnard* - 347
SOLAR Corona, Huggins' Method of Photographing without an Eclipse. *George E. Hale* - - - - - - - - - - 77
Observations, January-June, 1895. *P. Tacchini* - - - 224
Observations made in 1894, at Catania. *A. Mascari* - - 119
Phenomena, Distribution in Latitude. *P. Tacchini* - - - 26
Radiation, Electromagnetic Nature of. *H. Ebert* - - - 55
Spectrum Wave-lengths. *H. A. Rowland.* VI., p. 45; VII., p. 109; VIII., p. 188; IX., 306; X. - - - - - - - 360
SOLID Bodies, Spectra of. *F. Paschen* - - - - - - - 202
SPECTRA, B Band in Stellar. *W. W. Campbell* - - - - 163
Lines of Clèveite Gas in Stellar. *H. C. Vogel* - - - - 333
of Platinum and Osmium. *H. A. Rowland* and *R. R. Tatnall* - 184
of Solid Bodies. *F. Paschen* - - - - - - - - - 202
of Stars Containing both Bright and Dark Hydrogen Lines. *W. W. Campbell* - - - - - - - - - - - 177
of the Elements, Infra-red. *E. P. Lewis* - - - - 1, 106
Photographic Maps of Metallic. *H. Crew* - - - - 318
Stars having Peculiar. *M. Fleming* - - - - - - - 354
SPECTRAL Lines, Broadening of. *A. A. Michelson* - - - - 251
Type, Stars of the First. *H. C. Vogel* - - - - - 333
SPECTROGRAPHIC Determination of Velocities in the System of Saturn. *W. W. Campbell* - - - - - - - - - - - 127
SPECTROSCOPE, Multiple Transmission Prism. *F. L. O. Wadsworth* 264
SPECTROSCOPES, Fixed-arm Concave Grating. *F. L. O. Wadsworth* 370
SPECTROSCOPIC Observations of Colored Stars. *Friedrich Krueger* - 148
Observations of Mars, Review of. *W. W. Campbell* - - - 28
Proof of the Meteoric Constitution of Saturn's Rings. *James E. Keeler* - - - - - - - - - - - - - 163
SPECTRUM, Atmospheric Absorption Bands in the Infra-red. *F. W. Very* 237
of Carbon. *H. Crew* and *O. H. Basquin* - - - - - 103
of Helium. *W. Crookes* - - - - - - - - - 227
of Saturn, Form of Lines in. *James E. Keeler* - - - - 63
of the Aurora Borealis. *W. W. Campbell* - - - - 162
of the Chromosphere, D_3 Line in. *George E. Hale* - - - 165
of the Chromosphere, Wave-length of the D_3 Line in the. *George E. Hale* - - - - - - - - - - - - 384
of the Trifid Nebula. *W. W. Campbell* - - - - - 161
Wave-lengths, Solar. *H. A. Rowland.* VI., p. 45; VII., p. 109; VIII., p. 188; IX., p. 306; X. - - - - - - - 360

SPÖRER, Friedrich Wilhelm Gustav. *H. C. Vogel* - - - - 239
STARS, Colored, Spectroscopic Observations of. *Friedrich Krueger* - 148
Differential Method of Determining Velocity in the Line of Sight. *E. B. Frost* - - - - - - - - - 235
having Peculiar Spectra. *M. Fleming* - - - - - 354
of the First Spectral Type. *H. C. Vogel* - - - - 333
Eight New Variable. *M. Fleming* - - - - - - 354
Seven New Variable. *M. Fleming* - - - - - - 198
whose Spectra Contain both Bright and Dark Hydrogen Lines. *W. W. Campbell* - - - - - - - - - - 177
STELLAR Photometer, New Form of. *E. C. Pickering* - - - 89
Spectra, B Band in. *W. W. Campbell* - - - - - 163
Spectra, Lines of Clèveite Gas in. *H. C. Vogel* - - - 333
SUN, Schmidt's Theory of. *George E. Hale* - - - - - 69
Granulation of the Surface. *J. Scheiner* - - - - - 77
Temperature of. *H. Ebert* - - - - - - - - 55
Temperature of. *F. Paschen* - - - - - - - - 202
TELESCOPE, Visibility of Fine Lines in a. *A. A. Michelson* - - 60
TEMPERATURE of the Crater of an Electric Arc Light. *W. E. Wilson* 212
of the Sun. *H. Ebert* - - - - - - - - - 55
of the Sun. *F. Paschen* - - - - - - - - - 202
TRIFID Nebula, Spectrum of. *W. W. Campbell* - - - - 161
TROUVELOT, Etienne-Lèopold. - - - - - - - - - 166
TWILIGHT Arc upon Mars. *Percival Lowell* - - - - - 136
VARIABLE Stars, Eight New. *M. Fleming* - - - - - 354
Seven New. *M. Fleming* - - - - - - - - - 198
VARIATIONS, Short Period. *Alexander W. Roberts* - - - - 283
VELOCITIES in the System of Saturn. *W. W. Campbell* - - 127
VELOCITY of Stars in the Line of Sight, Differential Method of Determining. *E. B. Frost* - - - - - - - - - 235
VISIBILITY of Fine Lines in a Telescope. *A. A. Michelson* - - 60
WAVE-LENGTH of the D_3 Line. *George E. Hale* - - - - 384
WAVE-LENGTHS, Solar Spectrum. *H. A. Rowland.* VI., p. 45; VII., p. 109; VIII., p. 188; IX., p. 306; X. - - - - - 360
Measurement of some Standard Infra-red. *E. P. Lewis* - - 1, 106
YERKES Observatory. *George E. Hale* - - - - - 74

For titles of Reviews see table of contents.

INDEX OF AUTHORS.

PAGE.

BAILEY, S. I. On the Forms of the Disks of Jupiter's Satellites - 97
BARNARD, E. E. Celestial Photographs with a "Magic Lantern" Lens 351
On a Photographic Search for a Satellite to the Moon - - 347
Photograph of the Nebula *N.G.C.* 1499, near the Star ξ Persei 350
Photographs of Milky Way near 15 Monocerotis and ε Cygni - 58
BASQUIN, O. H., and H. CREW. Note on the Magnesium Band at λ 5007 - - - - - - - - - - - - - 100
Note on the Spectrum of Carbon - - - - - - - 103
CAMPBELL, W. W. A Review of the Spectroscopic Observations of Mars - - - - - - - - - - - - - 28
A Spectrographic Determination of Velocities in the System of Saturn - - - - - - - - - - - - 127
Stars Whose Spectra contain both Bright and Dark Hydrogen Lines - - - - - - - - - - - - 177
The Visible Spectrum of the Trifid Nebula - - - - 161
Note on the Spectrum of the Aurora Borealis - - - - 162
Observations of the B Band in Stellar Spectra - - - 163
CREW, H. Photographic Maps of Metallic Spectra - - - - 318
REVIEWS OF:
Molecules and the Molecular Theory of Matter. A. D. Risteen 392
Zur Theorie der Verbreiterung der Spectrallinien. Fürst B. Galitzin - - - - - - - - - - - - 324
CREW, H., and O. H. BASQUIN. Note on the Magnesium Band at λ 5007 - - - - - - - - - - - - - 100
Note on the Spectrum of Carbon - - - - - - - 103
CROOKES, WM. The Spectrum of Helium - - - - - - 227
EBERT, H. On the Electromagnetic Nature of the Solar Radiation, and on a New Determination of the Temperature of the Sun 55
FESSENDEN, R. A., REVIEW OF: On the Electrolysis of Gases. J. J. Thomson - - - - - - - - - - - - 394
FLEMING, M. Seven New Variable Stars - - - - - - 198
Stars having Peculiar Spectra. Eight New Variable Stars in Cetus, Vela, Centaurus, Lupus, Scorpio, Aquila, and Pegasus 354
FROST, E. B. Note on a Differential Method of Determining the Velocity of Stars in the Line of Sight - - - - - 235
Note on Helium in Beta Lyræ - - - - - - - 363

REVIEW OF:
Untersuchung über die Spectra der hellern Sterne. J. Scheiner 386
HALE, GEORGE E. Note on the D_3 Line in the Spectrum of the Chromosphere - - - - - - - - - - - 165
Notes on Schmidt's Theory of the Sun. (Communicated by E. J. Wilczynski) - - - - - - - - - - 69
Note on the Huggins Method of Photographing the Solar Corona without an Eclipse - - - - - - - 77
Note on the Yerkes Observatory - - - - - - - 74
On the Presence of Helium in Clèveite - - - - - - 76
On the Wave-length of the D_3 Line in the Spectrum of the Chromosphere - - - - - - - - - - - 384
JAUMANN, G. A Contribution to the Theory of Radiation - - 215
KEELER, JAMES E. Conditions Affecting the form of Lines in the Spectrum of Saturn - - - - - - - - - - 63
Note on the Spectroscopic Proof of the Meteoric Constitution of Saturn's Rings - - - - - - - - - - 163
REVIEWS OF:
Beobachtungen angestellt am Astrophysikalischen Observatorium in O Gyalla - - - - - - - - - - 81
Ein neues Spectralphotometer. Arthur König - - - - 81
Untersuchung der Spectralen Zusammensetzung verschiedener Lichtquellen. Else Köttgen - - - - - - - 82
Bemerkung zu der Abhandlung über Lichtemission. G. Jaumann 241
KRUEGER, FRIEDRICH. Spectroscopic Observations of Colored Stars 148
LEWIS, E. P. The Measurement of some Standard Wave-lengths in the Infra-red Spectra of the Elements - - - - - 1, 106
LOWELL, PERCIVAL. On the Existence of a Twilight Arc upon the Planet Mars - - - - - - - - - - - 136
MASCARI, A. Résumé of Solar Observations made in 1894 at the Astrophysical Observatory of Catania - - - - - 119
MICHELSON, A. A. On the Limit of Visibility of Fine Lines in a Telescope - - - - - - - - - - - - 60
On the Broadening of Spectral Lines - - - - - - 251
PASCHEN, F. On the Existence of Law in the Spectra of Solid Bodies, and on a New Determination of the Temperature of the Sun 202
PICKERING, E. C. A New Form of Stellar Photometer - - - 89
Harvard College Observatory Circulars, No. 1 and No. 2 - 320
REID, HARRY FIELDING. Preliminary Note on the Radiation of Incandescent Platinum - - - - - - - - - 160
RICCÒ, A. Note on the Duplicity of the D_3 Line - - - - - 236
Photograph of the Nebula near 42 Orionis made at the Astrophysical Observatory of Catania - - - - - - 164

ROBERTS, ALEXANDER W. Close Binary Systems and their Relation to Short Period Variations - - - - - - - - - 283
ROWLAND, H. A. Preliminary Table of Solar Spectrum Wave-lengths. VI., p. 45; VII., p. 109; VIII. p. 188; IX., p. 306; X. - - 360
ROWLAND, H. A., and R. R. TATNALL. The Arc-Spectra of the Elements. III. Platinum and Osmium - - - - - - 184
SCHEINER, J. On the Cause of the Granulation of the Surface of the Sun - - - - - - - - - - - - - - - 77
TACCHINI, P. On the Distribution in Latitude of Solar Phenomena observed at the Royal Observatory of the Roman College in 1894 - - - - - - - - - - - - - 26
Solar Observations made at the Royal Observatory of the Roman College: January-June, 1895 - - - - - - 224
TATNALL, R. R., and H. A. ROWLAND. The Arc-Spectra of the Elements. III. Platinum and Osmium - - - - - - 184
VERY, F. W. Note on Earlier Observations of Atmospheric Absorption Bands in the Infra-red Spectrum - - - - - - 237
Photometry of a Lunar Eclipse - - - - - - - 293
Note on Paschen's Laws of Radiation - - - - - - 316
VOGEL, H. C. Friedrich Wilhelm Gustav Spörer - - - - - 239
On the Occurrence in Stellar Spectra of the Lines of Clèveite Gas, and on the Classification of Stars of the First Spectral Type - - - - - - - - - - - - - - 333
WADSWORTH, F. L. O. The Modern Spectroscope. XIII. A New Multiple Transmission Prism of Great Resolving Power - - 264
XIV. Fixed-arm Concave Grating Spectroscopes - - - 370
WILSON, W. E. On the Effect of Pressure of the Surrounding Gas on the Temperature of the Crater of an Electric Arc Light - 212

PERIODICAL

THIS BOOK IS DUE ON THE LAST DATE
STAMPED BELOW

RENEWED BOOKS ARE SUBJECT TO
IMMEDIATE RECALL

Library, University of California, Davis

Series 458A

Astrophysical

GB1
A7
v.2

PHYSICAL
SCIENCES
LIBRARY

LIBRARY
UNIVERSITY OF CALIFORNIA
DAVIS

212146

3 1175 00997 0420